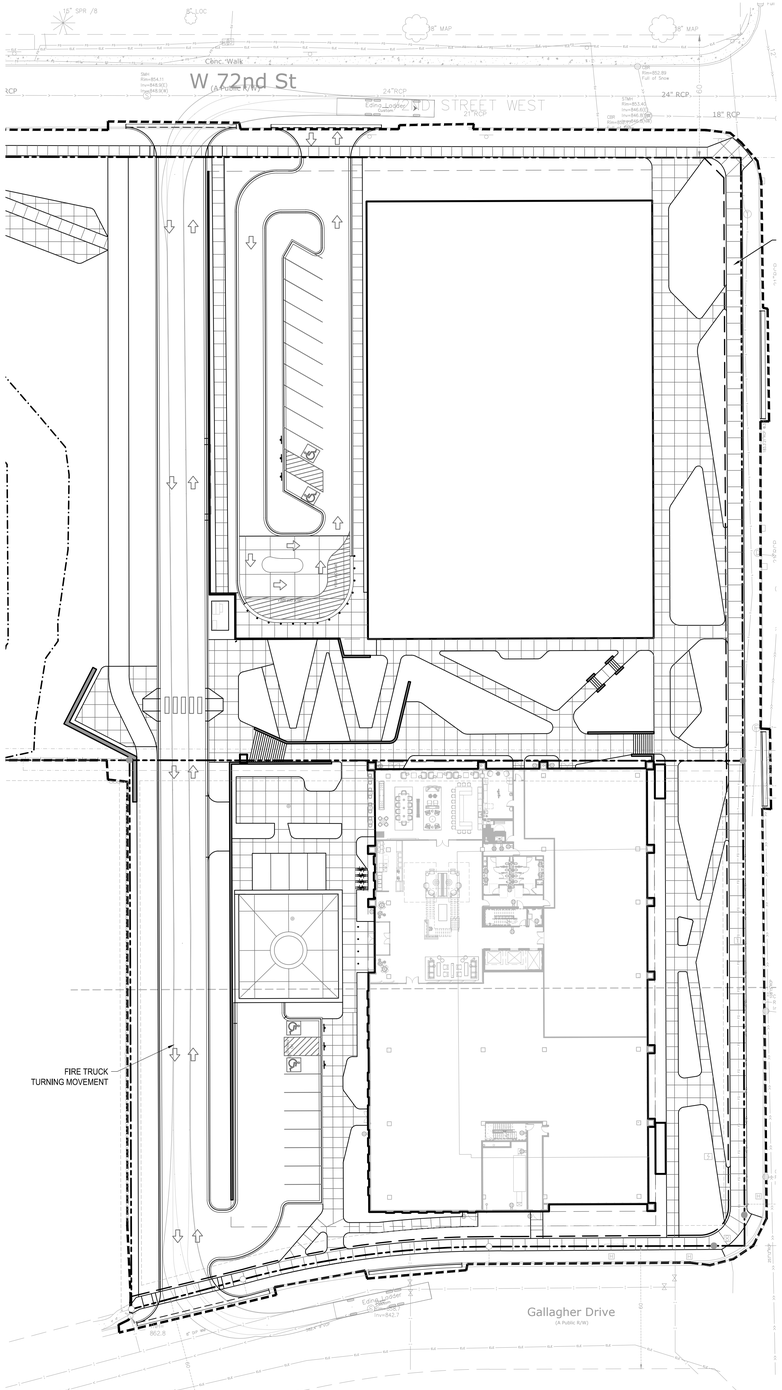

FIRE TRUCK TURNING MOVEMENT

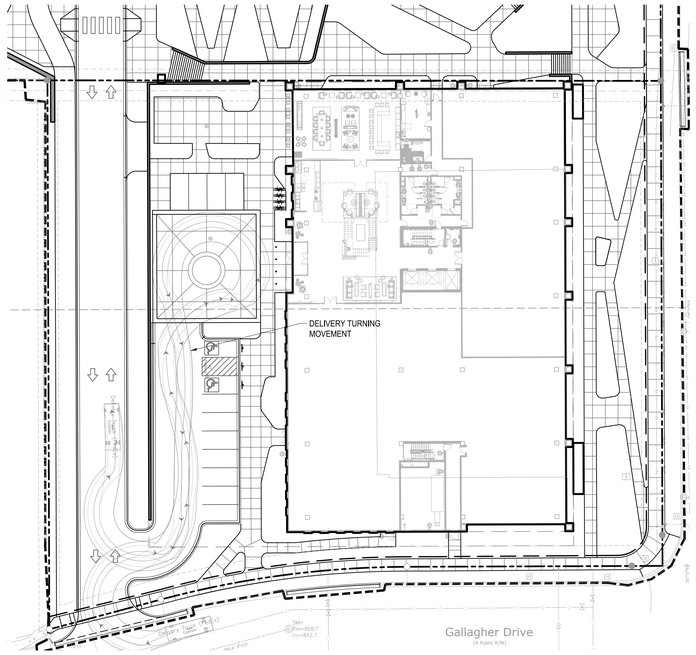

7250 FRANCE - DELIVERY

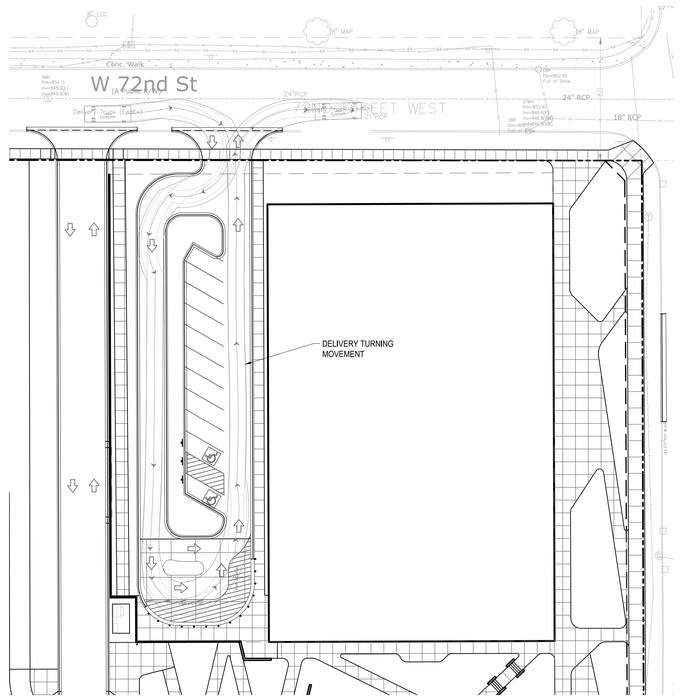

7200 FRANCE - DELIVERY

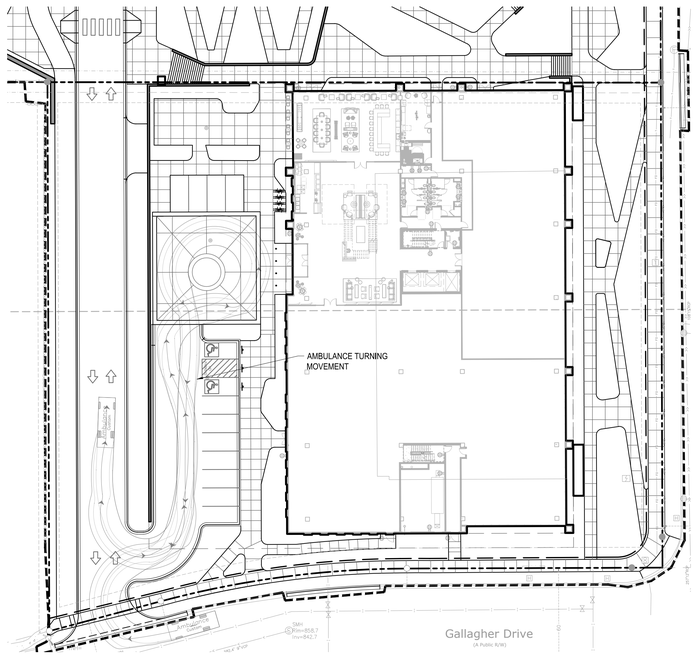

7250 FRANCE - AMBULANCE

CivilSite GROUP
Civil Engineering • Surveying • Landscape Architecture
5000 Glenwood Avenue
Golden Valley, MN 55422
civilsitegroup.com 612-615-0060

PRELIMINARY: NOT FOR CONSTRUCTION

PROJECT

7200 & 7250 FRANCE

7200 & 7250 FRANCE AVE S, EDINA, MN 55435

ORIONINVESTMENTS
6550 YORK AVE S SUITE 207, EDINA, MN 55435

I HEREBY CERTIFY THAT THIS PLAN, SPECIFICATION, OR REPORT WAS PREPARED BY ME OR UNDER MY DIRECT SUPERVISION AND THAT I AM A DULY LICENSED PROFESSIONAL ENGINEER UNDER THE LAWS OF THE STATE OF MINNESOTA.

David J. Knaeble

David J. Knaeble

DATE 1/10/23 LICENSE NO. 48776

ISSUE/SUBMITTAL SUMMARY

DATE	DESCRIPTION
06/30/2022	CITY SUBMITTAL
8/12/2022	PUD SUBMISSION
1/10/23	FINAL PUD SUBMITTAL

DRAWN BY: AM REVIEWED BY: DK
PROJECT NUMBER: 21419

REVISION SUMMARY

DATE	DESCRIPTION

Know what's **below.** **Call** before you dig.

N

1" = 30'-0"
15'-0" 0 30'-0"

TURNING MOVEMENTS

C2.2

© COPYRIGHT 2022 CIVIL SITE GROUP INC.

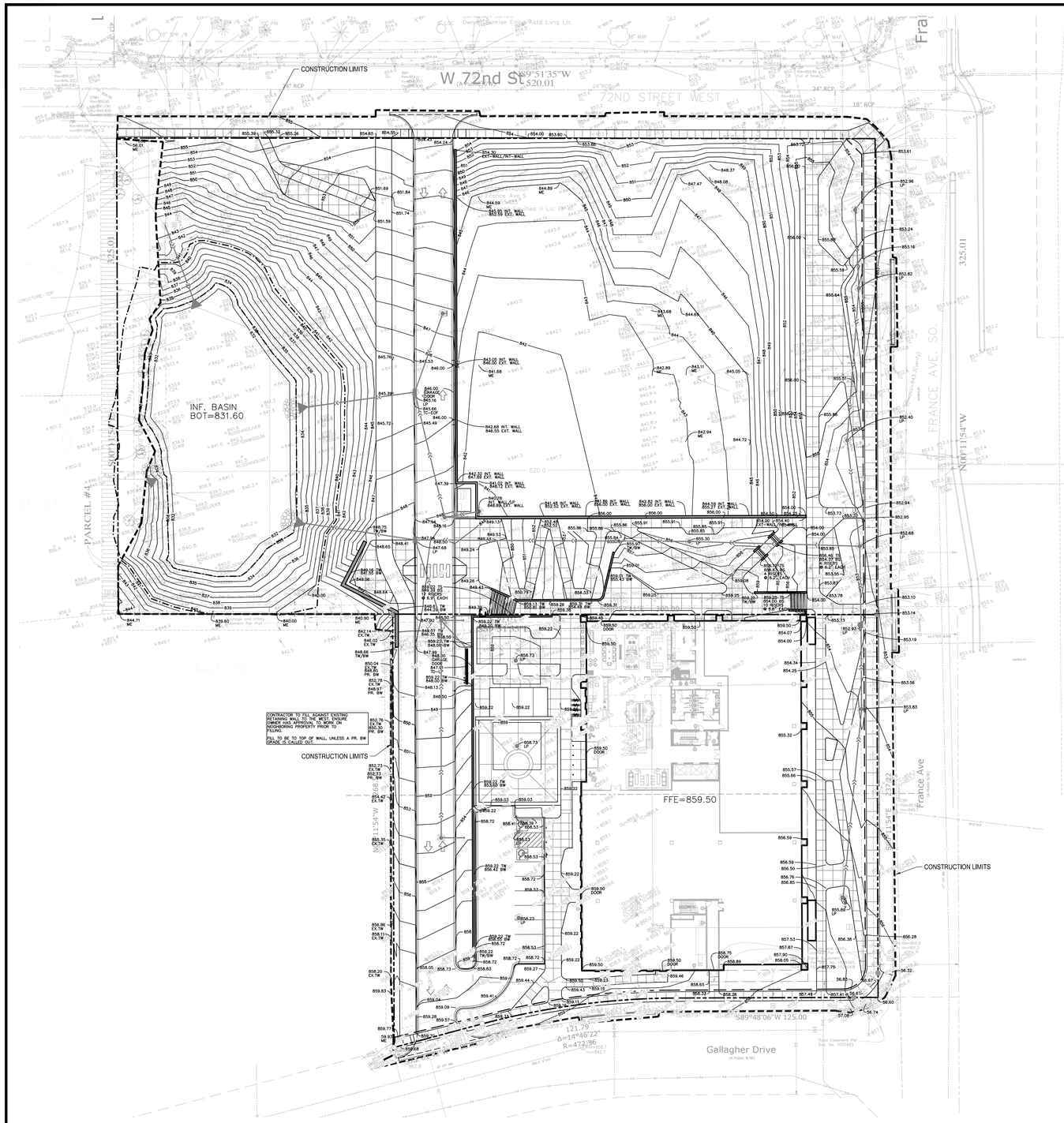

GENERAL GRADING NOTES:

1. **CONTRACTOR SHALL VERIFY ALL BUILDING ELEVATIONS, (FFE, LFE, GFE), PRIOR TO CONSTRUCTION BY CROSS CHECKING WITH ARCHITECTURAL, STRUCTURAL AND CIVIL ELEVATIONS FOR EQUIVALENT "100" ELEVATIONS. THIS MUST BE DONE PRIOR TO EXCAVATION AND INSTALLATION OF ANY FOOTING MATERIALS. VERIFICATION OF THIS COORDINATION SHALL BE CONFIRMED IN WRITING BY CIVIL, SURVEYOR, ARCHITECTURAL, STRUCTURAL AND CONTRACTOR PRIOR TO CONSTRUCTION.**
2. ALL EXISTING UTILITY LOCATIONS SHOWN ARE APPROXIMATE. CONTACT "GOPHER STATE ONE CALL" (651-454-0002 OR 800-252-1166) FOR UTILITY LOCATIONS, 48 HOURS PRIOR TO CONSTRUCTION. THE CONTRACTOR SHALL REPAIR OR REPLACE ANY UTILITIES THAT ARE DAMAGED DURING CONSTRUCTION AT NO COST TO THE OWNER.
3. SEE SITE PLAN FOR HORIZONTAL LAYOUT & GENERAL GRADING NOTES.
4. THE CONTRACTOR SHALL COMPLETE THE SITE GRADING CONSTRUCTION (INCLUDING BUT NOT LIMITED TO SITE PREPARATION, SOIL CORRECTION, EXCAVATION, EMBANKMENT, ETC.) IN ACCORDANCE WITH THE REQUIREMENTS OF THE OWNER'S SOILS ENGINEER. ALL SOIL TESTING SHALL BE COMPLETED BY THE OWNER'S SOILS ENGINEER. THE CONTRACTOR SHALL BE RESPONSIBLE FOR COORDINATING ALL REQUIRED SOIL TESTS AND INSPECTIONS WITH THE SOILS ENGINEER.
5. ANY ELEMENTS OF AN EARTH RETENTION SYSTEM AND RELATED EXCAVATIONS THAT FALL WITHIN THE PUBLIC RIGHT OF WAY WILL REQUIRE A "RIGHT OF WAY EXCAVATION PERMIT". CONTRACTOR IS RESPONSIBLE FOR AQUIRING THIS PERMIT PRIOR TO CONSTRUCTION IF APPLICABLE
6. ALL EXISTING UTILITY LOCATIONS SHOWN ARE APPROXIMATE. CONTACT "GOPHER STATE ONE CALL" (651-454-0002 OR 800-252-1166) FOR UTILITY LOCATIONS, 48 HOURS PRIOR TO CONSTRUCTION. THE CONTRACTOR SHALL REPAIR OR REPLACE ANY UTILITIES THAT ARE DAMAGED DURING CONSTRUCTION AT NO COST TO THE OWNER.
3. GRADING AND EXCAVATION ACTIVITIES SHALL BE PERFORMED IN ACCORDANCE WITH THE NATIONAL POLLUTION DISCHARGE ELIMINATION SYSTEM (NPDES) PERMIT REQUIREMENTS & PERMIT REQUIREMENTS OF THE CITY.
4. PROPOSED SPOT GRADES ARE FLOW-LINE FINISHED GRADE ELEVATIONS, UNLESS OTHERWISE NOTED.
5. GRADES OF WALKS SHALL BE INSTALLED WITH 5% MAX. LONGITUDINAL SLOPE AND 1% MIN. AND 2% MAX. CROSS SLOPE, UNLESS OTHERWISE NOTED.
6. PROPOSED SLOPES SHALL NOT EXCEED 3:1 UNLESS INDICATED OTHERWISE ON THE DRAWINGS. MAXIMUM SLOPES IN MAINTAINED AREAS IS 4:1
7. PROPOSED RETAINING WALLS, FREESTANDING WALLS, OR COMBINATION OF WALL TYPES GREATER THAN 4' IN HEIGHT SHALL BE DESIGNED AND ENGINEERED BY A REGISTERED RETAINING WALL ENGINEER. DESIGN DRAWINGS SHALL BE SUBMITTED FOR REVIEW AND APPROVAL PRIOR TO CONSTRUCTION.
8. THE CONTRACTOR SHALL BE RESPONSIBLE FOR MAINTENANCE OF GRADE STAKES THROUGHOUT THE DURATION OF CONSTRUCTION TO ESTABLISH PROPER GRADES. THE CONTRACTOR SHALL ALSO BE RESPONSIBLE FOR A FINAL FIELD CHECK OF FINISHED GRADES ACCEPTABLE TO THE ENGINEER/LANDSCAPE ARCHITECT PRIOR TO TOPSOIL AND SODDING ACTIVITIES.
9. IF EXCESS OR SHORTAGE OF SOIL MATERIAL EXISTS, THE CONTRACTOR SHALL TRANSPORT ALL EXCESS SOIL MATERIAL OFF THE SITE TO AN AREA SELECTED BY THE CONTRACTOR, OR IMPORT SUITABLE MATERIAL TO THE SITE.
10. EXCAVATE TOPSOIL FROM AREAS TO BE FURTHER EXCAVATED OR REGRADED AND STOCKPILE IN AREAS DESIGNATED ON THE SITE. THE CONTRACTOR SHALL SALVAGE ENOUGH TOPSOIL FOR RESPREADING ON THE SITE AS SPECIFIED. EXCESS TOPSOIL SHALL BE PLACED IN EMBANKMENT AREAS, OUTSIDE OF BUILDING PADS, ROADWAYS AND PARKING AREAS. THE CONTRACTOR SHALL SUBCUT CUT AREAS, WHERE TURF IS TO BE ESTABLISHED, TO A DEPTH OF 6 INCHES. RESPREAD TOPSOIL IN AREAS WHERE TURF IS TO BE ESTABLISHED TO A MINIMUM DEPTH OF 6 INCHES.
11. FINISHED GRADING SHALL BE COMPLETED. THE CONTRACTOR SHALL UNIFORMLY GRADE AREAS WITHIN LIMITS OF GRADING, INCLUDING ADJACENT TRANSITION AREAS. PROVIDE A SMOOTH FINISHED SURFACE WITHIN SPECIFIED TOLERANCES, WITH UNIFORM LEVELS OR SLOPES BETWEEN POINTS WHERE ELEVATIONS ARE SHOWN, OR BETWEEN SUCH POINTS AND EXISTING GRADES. AREAS THAT HAVE BEEN FINISH GRADED SHALL BE PROTECTED FROM SUBSEQUENT CONSTRUCTION OPERATIONS, TRAFFIC AND EROSION. REPAIR ALL AREAS THAT HAVE BECOME RUTTED BY TRAFFIC OR ERODED BY WATER OR HAS SETTLED BELOW THE CORRECT GRADE. ALL AREAS DISTURBED BY THE CONTRACTOR'S OPERATIONS SHALL BE RESTORED TO EQUAL OR BETTER THAN ORIGINAL CONDITION OR TO THE REQUIREMENTS OF THE NEW WORK.
12. PRIOR TO PLACEMENT OF THE AGGREGATE BASE, A TEST ROLL WILL BE REQUIRED ON THE STREET AND/OR PARKING AREA SUBGRADE, THE CONTRACTOR SHALL PROVIDE A LOADED TANDEM AXLE TRUCK WITH A GROSS WEIGHT OF 25 TONS. THE TEST ROLLING SHALL BE AT THE DIRECTION OF THE SOILS ENGINEER AND SHALL BE COMPLETED IN AREAS AS DIRECTED BY THE SOILS ENGINEER. THE SOILS ENGINEER SHALL DETERMINE WHICH SECTIONS OF THE STREET OR PARKING AREA ARE UNSTABLE. CORRECTION OF THE SUBGRADE SOILS SHALL BE COMPLETED IN ACCORDANCE WITH THE REQUIREMENTS OF THE SOILS ENGINEER. NO TEST ROLL SHALL OCCUR WITHIN 10' OF ANY UNDERGROUND STORM RETENTION/DETENTION SYSTEMS.
13. TOLERANCES
    - 13.1. THE BUILDING SUBGRADE FINISHED SURFACE ELEVATION SHALL NOT VARY BY MORE THAN 0.30 FOOT ABOVE, OR 0.30 FOOT BELOW, THE PRESCRIBED ELEVATION AT ANY POINT WHERE MEASUREMENT IS MADE.
    - 13.2. THE STREET OR PARKING AREA SUBGRADE FINISHED SURFACE ELEVATION SHALL NOT VARY BY MORE THAN 0.05 FOOT ABOVE, OR 0.10 FOOT BELOW, THE PRESCRIBED ELEVATION OF ANY POINT WHERE MEASUREMENT IS MADE.
    - 13.3. AREAS WHICH ARE TO RECEIVE TOPSOIL SHALL BE GRADED TO WITHIN 0.30 FOOT ABOVE OR BELOW THE REQUIRED ELEVATION, UNLESS DIRECTED OTHERWISE BY THE ENGINEER.
    - 13.4. TOPSOIL SHALL BE GRADED TO PLUS OR MINUS 1/2 INCH OF THE SPECIFIED THICKNESS.
14. MAINTENANCE
    - 14.1. THE CONTRACTOR SHALL PROTECT NEWLY GRADED AREAS FROM TRAFFIC AND EROSION, AND KEEP AREA FREE OF TRASH AND DEBRIS.
    - 14.2. CONTRACTOR SHALL REPAIR AND REESTABLISH GRADES IN SETTLED, ERODED AND RUTTED AREAS TO SPECIFIED TOLERANCES. DURING THE CONSTRUCTION, IF REQUIRED, AND DURING THE WARRANTY PERIOD, ERODED AREAS WHERE TURF IS TO BE ESTABLISHED SHALL BE RESEEDED AND MULCHED.
    - 14.3. WHERE COMPLETED COMPACTED AREAS ARE DISTURBED BY SUBSEQUENT CONSTRUCTION OPERATIONS OR ADVERSE WEATHER, CONTRACTOR SHALL SCARIFY, SURFACE, RESHAPE, AND COMPACT TO REQUIRED DENSITY PRIOR TO FURTHER CONSTRUCTION.

CITY OF EDINA GRADING NOTES:

1. RESERVED FOR CITY SPECIFIC GRADING NOTES.

EROSION CONTROL NOTES:

SEE SWPPP ON SHEETS SW1.0 - SW1.6

GROUNDWATER INFORMATION:

PER GEOTECHNICAL REPORT BY NORTHERN TECHNOLOGIES, INC., DATED 04-09-14
GROUNDWATER WAS OBSERVED AT ELEVATIONS RANGING FROM 817.3 TO 818.8.

GRADING PLAN LEGEND:

1125	EX. 1' CONTOUR ELEVATION INTERVAL
1137	1.0' CONTOUR ELEVATION INTERVAL
41.26	SPOT GRADE ELEVATION (GUTTER/FLOW LINE UNLESS OTHERWISE NOTED)
891.00 G	SPOT GRADE ELEVATION GUTTER
891.00 TC	SPOT GRADE ELEVATION TOP OF CURB
891.00 BS/TS	SPOT GRADE ELEVATION BOTTOM OF STAIRS/TOP OF STAIRS
891.00 ME	SPOT GRADE ELEVATION MATCH EXISTING
GB	GRADE BREAK - HIGH POINTS
TO	CURB AND GUTTER (T.O = TIP OUT)
EOF=1135.52	EMERGENCY OVERFLOW

Know what's **below.** **Call** before you dig.

1" = 30'-0"
15'-0" 0 30'-0"

CivilSite GROUP
Civil Engineering • Surveying • Landscape Architecture
5000 Glenwood Avenue
Golden Valley, MN 55422
civilsitegroup.com 612-615-0060

PRELIMINARY: NOT FOR CONSTRUCTION

PROJECT
7200 & 7250 FRANCE
7200 & 7250 FRANCE AVE S, EDINA, MN 55435

ORION INVESTMENTS
6550 YORK AVE S SUITE 207, EDINA, MN 55435

I HEREBY CERTIFY THAT THIS PLAN, SPECIFICATION, OR REPORT WAS PREPARED BY ME OR UNDER MY DIRECT SUPERVISION AND THAT I AM A DULY LICENSED PROFESSIONAL ENGINEER UNDER THE LAWS OF THE STATE OF MINNESOTA.

David J. Knaeble
DATE 1/10/23 LICENSE NO. 48776

ISSUE/SUBMITTAL SUMMARY

DATE	DESCRIPTION
06/30/2022	CITY SUBMITTAL
8/12/2022	PUD SUBMISSION
1/10/23	FINAL PUD SUBMITTAL

DRAWN BY: AM REVIEWED BY: DK
PROJECT NUMBER: 21419

REVISION SUMMARY

DATE	DESCRIPTION

PH. 1 (A)
GRADING PLAN

C3.0 A

© COPYRIGHT 2022 CIVIL SITE GROUP INC.

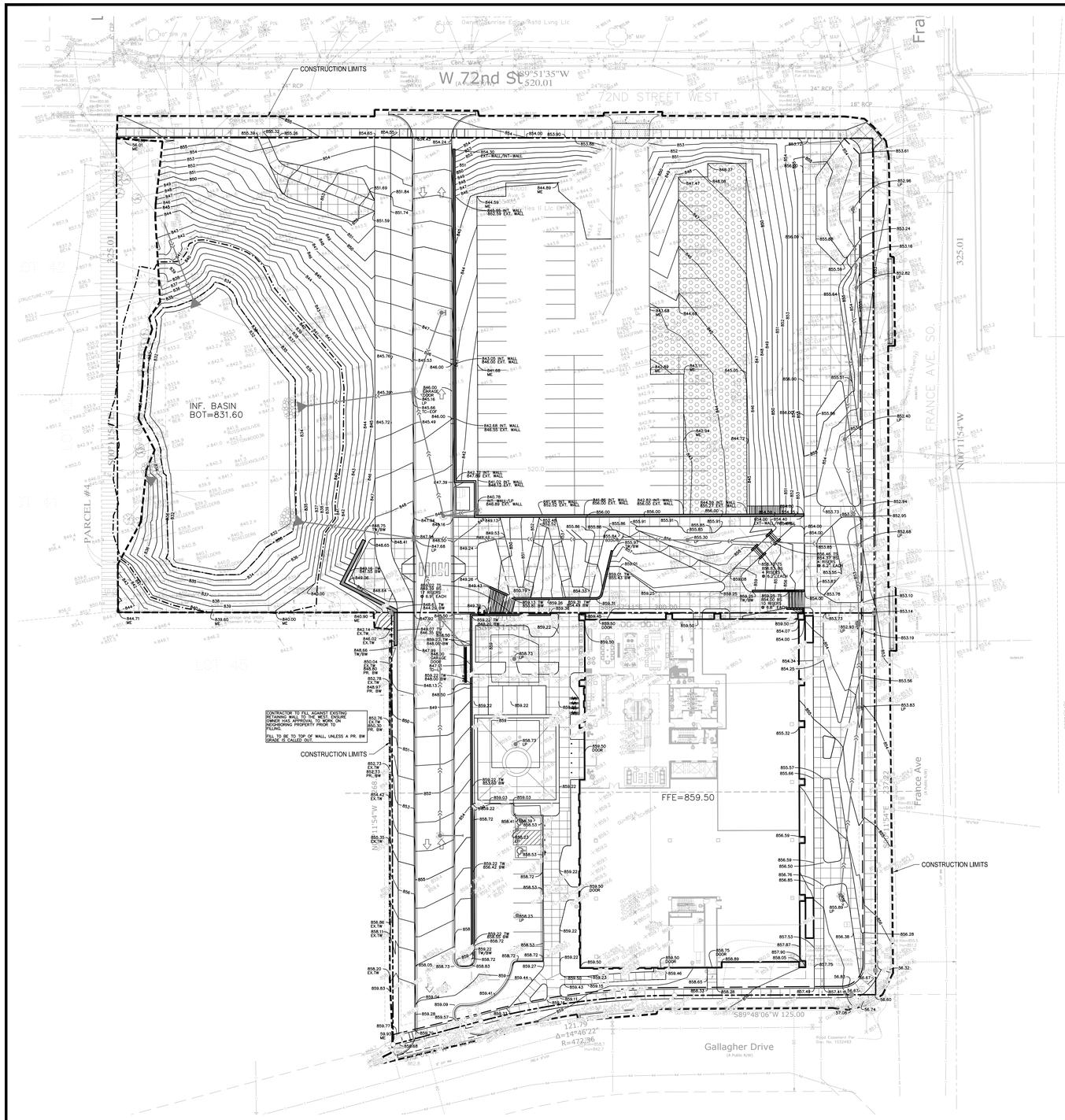

GENERAL GRADING NOTES:

1. **CONTRACTOR SHALL VERIFY ALL BUILDING ELEVATIONS, (FFE, LFE, GFE), PRIOR TO CONSTRUCTION BY CROSS CHECKING WITH ARCHITECTURAL, STRUCTURAL AND CIVIL ELEVATIONS FOR EQUIVALENT "100" ELEVATIONS. THIS MUST BE DONE PRIOR TO EXCAVATION AND INSTALLATION OF ANY FOOTING MATERIALS. VERIFICATION OF THIS COORDINATION SHALL BE CONFIRMED IN WRITING BY CIVIL, SURVEYOR, ARCHITECTURAL, STRUCTURAL AND CONTRACTOR PRIOR TO CONSTRUCTION.**
2. ALL EXISTING UTILITY LOCATIONS SHOWN ARE APPROXIMATE. CONTACT "GOPHER STATE ONE CALL" (651-454-0002 OR 800-252-1166) FOR UTILITY LOCATIONS, 48 HOURS PRIOR TO CONSTRUCTION. THE CONTRACTOR SHALL REPAIR OR REPLACE ANY UTILITIES THAT ARE DAMAGED DURING CONSTRUCTION AT NO COST TO THE OWNER.
3. SEE SITE PLAN FOR HORIZONTAL LAYOUT & GENERAL GRADING NOTES.
4. THE CONTRACTOR SHALL COMPLETE THE SITE GRADING CONSTRUCTION (INCLUDING BUT NOT LIMITED TO SITE PREPARATION, SOIL CORRECTION, EXCAVATION, EMBANKMENT, ETC.) IN ACCORDANCE WITH THE REQUIREMENTS OF THE OWNER'S SOILS ENGINEER. ALL SOIL TESTING SHALL BE COMPLETED BY THE OWNER'S SOILS ENGINEER. THE CONTRACTOR SHALL BE RESPONSIBLE FOR COORDINATING ALL REQUIRED SOIL TESTS AND INSPECTIONS WITH THE SOILS ENGINEER.
5. ANY ELEMENTS OF AN EARTH RETENTION SYSTEM AND RELATED EXCAVATIONS THAT FALL WITHIN THE PUBLIC RIGHT OF WAY WILL REQUIRE A "RIGHT OF WAY EXCAVATION PERMIT". CONTRACTOR IS RESPONSIBLE FOR AQUIRING THIS PERMIT PRIOR TO CONSTRUCTION IF APPLICABLE
6. ALL EXISTING UTILITY LOCATIONS SHOWN ARE APPROXIMATE. CONTACT "GOPHER STATE ONE CALL" (651-454-0002 OR 800-252-1166) FOR UTILITY LOCATIONS, 48 HOURS PRIOR TO CONSTRUCTION. THE CONTRACTOR SHALL REPAIR OR REPLACE ANY UTILITIES THAT ARE DAMAGED DURING CONSTRUCTION AT NO COST TO THE OWNER.
3. GRADING AND EXCAVATION ACTIVITIES SHALL BE PERFORMED IN ACCORDANCE WITH THE NATIONAL POLLUTION DISCHARGE ELIMINATION SYSTEM (NPDES) PERMIT REQUIREMENTS & PERMIT REQUIREMENTS OF THE CITY.
4. PROPOSED SPOT GRADES ARE FLOW-LINE FINISHED GRADE ELEVATIONS, UNLESS OTHERWISE NOTED.
5. GRADES OF WALKS SHALL BE INSTALLED WITH 5% MAX. LONGITUDINAL SLOPE AND 1% MIN. AND 2% MAX. CROSS SLOPE, UNLESS OTHERWISE NOTED.
6. PROPOSED SLOPES SHALL NOT EXCEED 3:1 UNLESS INDICATED OTHERWISE ON THE DRAWINGS. MAXIMUM SLOPES IN MAINTAINED AREAS IS 4:1
7. PROPOSED RETAINING WALLS, FREESTANDING WALLS, OR COMBINATION OF WALL TYPES GREATER THAN 4' IN HEIGHT SHALL BE DESIGNED AND ENGINEERED BY A REGISTERED RETAINING WALL ENGINEER. DESIGN DRAWINGS SHALL BE SUBMITTED FOR REVIEW AND APPROVAL PRIOR TO CONSTRUCTION.
8. THE CONTRACTOR SHALL BE RESPONSIBLE FOR MAINTENANCE OF GRADE STAKES THROUGHOUT THE DURATION OF CONSTRUCTION TO ESTABLISH PROPER GRADES. THE CONTRACTOR SHALL ALSO BE RESPONSIBLE FOR A FINAL FIELD CHECK OF FINISHED GRADES ACCEPTABLE TO THE ENGINEER/LANDSCAPE ARCHITECT PRIOR TO TOPSOIL AND SODDING ACTIVITIES.
9. IF EXCESS OR SHORTAGE OF SOIL MATERIAL EXISTS, THE CONTRACTOR SHALL TRANSPORT ALL EXCESS SOIL MATERIAL OFF THE SITE TO AN AREA SELECTED BY THE CONTRACTOR, OR IMPORT SUITABLE MATERIAL TO THE SITE.
10. EXCAVATE TOPSOIL FROM AREAS TO BE FURTHER EXCAVATED OR REGRADED AND STOCKPILE IN AREAS DESIGNATED ON THE SITE. THE CONTRACTOR SHALL SALVAGE ENOUGH TOPSOIL FOR RESPREADING ON THE SITE AS SPECIFIED. EXCESS TOPSOIL SHALL BE PLACED IN EMBANKMENT AREAS, OUTSIDE OF BUILDING PADS, ROADWAYS AND PARKING AREAS. THE CONTRACTOR SHALL SUBCUT CUT AREAS, WHERE TURF IS TO BE ESTABLISHED, TO A DEPTH OF 6 INCHES. RESPREAD TOPSOIL IN AREAS WHERE TURF IS TO BE ESTABLISHED TO A MINIMUM DEPTH OF 6 INCHES.
11. FINISHED GRADING SHALL BE COMPLETED. THE CONTRACTOR SHALL UNIFORMLY GRADE AREAS WITHIN LIMITS OF GRADING, INCLUDING ADJACENT TRANSITION AREAS. PROVIDE A SMOOTH FINISHED SURFACE WITHIN SPECIFIED TOLERANCES, WITH UNIFORM LEVELS OR SLOPES BETWEEN POINTS WHERE ELEVATIONS ARE SHOWN, OR BETWEEN SUCH POINTS AND EXISTING GRADES. AREAS THAT HAVE BEEN FINISH GRADED SHALL BE PROTECTED FROM SUBSEQUENT CONSTRUCTION OPERATIONS, TRAFFIC AND EROSION. REPAIR ALL AREAS THAT HAVE BECOME RUTTED BY TRAFFIC OR ERODED BY WATER OR HAS SETTLED BELOW THE CORRECT GRADE. ALL AREAS DISTURBED BY THE CONTRACTOR'S OPERATIONS SHALL BE RESTORED TO EQUAL OR BETTER THAN ORIGINAL CONDITION OR TO THE REQUIREMENTS OF THE NEW WORK.
12. PRIOR TO PLACEMENT OF THE AGGREGATE BASE, A TEST ROLL WILL BE REQUIRED ON THE STREET AND/OR PARKING AREA SUBGRADE, THE CONTRACTOR SHALL PROVIDE A LOADED TANDEM AXLE TRUCK WITH A GROSS WEIGHT OF 25 TONS. THE TEST ROLLING SHALL BE AT THE DIRECTION OF THE SOILS ENGINEER AND SHALL BE COMPLETED IN AREAS AS DIRECTED BY THE SOILS ENGINEER. THE SOILS ENGINEER SHALL DETERMINE WHICH SECTIONS OF THE STREET OR PARKING AREA ARE UNSTABLE. CORRECTION OF THE SUBGRADE SOILS SHALL BE COMPLETED IN ACCORDANCE WITH THE REQUIREMENTS OF THE SOILS ENGINEER. NO TEST ROLL SHALL OCCUR WITHIN 10' OF ANY UNDERGROUND STORM RETENTION/DETENTION SYSTEMS.
13. TOLERANCES
    - 13.1. THE BUILDING SUBGRADE FINISHED SURFACE ELEVATION SHALL NOT VARY BY MORE THAN 0.30 FOOT ABOVE, OR 0.30 FOOT BELOW, THE PRESCRIBED ELEVATION AT ANY POINT WHERE MEASUREMENT IS MADE.
    - 13.2. THE STREET OR PARKING AREA SUBGRADE FINISHED SURFACE ELEVATION SHALL NOT VARY BY MORE THAN 0.05 FOOT ABOVE, OR 0.10 FOOT BELOW, THE PRESCRIBED ELEVATION OF ANY POINT WHERE MEASUREMENT IS MADE.
    - 13.3. AREAS WHICH ARE TO RECEIVE TOPSOIL SHALL BE GRADED TO WITHIN 0.30 FOOT ABOVE OR BELOW THE REQUIRED ELEVATION, UNLESS DIRECTED OTHERWISE BY THE ENGINEER.
    - 13.4. TOPSOIL SHALL BE GRADED TO PLUS OR MINUS 1/2 INCH OF THE SPECIFIED THICKNESS.
14. MAINTENANCE
    - 14.1. THE CONTRACTOR SHALL PROTECT NEWLY GRADED AREAS FROM TRAFFIC AND EROSION, AND KEEP AREA FREE OF TRASH AND DEBRIS.
    - 14.2. CONTRACTOR SHALL REPAIR AND REESTABLISH GRADES IN SETTLED, ERODED AND RUTTED AREAS TO SPECIFIED TOLERANCES. DURING THE CONSTRUCTION, IF REQUIRED, AND DURING THE WARRANTY PERIOD, ERODED AREAS WHERE TURF IS TO BE ESTABLISHED SHALL BE RESEEDED AND MULCHED.
    - 14.3. WHERE COMPLETED COMPACTED AREAS ARE DISTURBED BY SUBSEQUENT CONSTRUCTION OPERATIONS OR ADVERSE WEATHER, CONTRACTOR SHALL SCARIFY, SURFACE, RESHAPE, AND COMPACT TO REQUIRED DENSITY PRIOR TO FURTHER CONSTRUCTION.

CITY OF EDINA GRADING NOTES:

1. RESERVED FOR CITY SPECIFIC GRADING NOTES.

EROSION CONTROL NOTES:

SEE SWPPP ON SHEETS SW1.0 - SW1.6

GROUNDWATER INFORMATION:

PER GEOTECHNICAL REPORT BY NORTHERN TECHNOLOGIES, INC., DATED 04-09-14
GROUNDWATER WAS OBSERVED AT ELEVATIONS RANGING FROM 817.3 TO 818.8.

GRADING PLAN LEGEND:

1125	EX. 1' CONTOUR ELEVATION INTERVAL
1137	1.0' CONTOUR ELEVATION INTERVAL
41.26	SPOT GRADE ELEVATION (GUTTER/FLOW LINE UNLESS OTHERWISE NOTED)
891.00 G	SPOT GRADE ELEVATION GUTTER
891.00 TC	SPOT GRADE ELEVATION TOP OF CURB
891.00 BS/TS	SPOT GRADE ELEVATION BOTTOM OF STAIRS/TOP OF STAIRS
891.00 ME	SPOT GRADE ELEVATION MATCH EXISTING
GB	GRADE BREAK - HIGH POINTS
TO	CURB AND GUTTER (T.O = TIP OUT)
EOF=1135.52	EMERGENCY OVERFLOW

Know what's **below.** **Call** before you dig.

1" = 30'-0"
15'-0" 0 30'-0"

CivilSite GROUP
Civil Engineering • Surveying • Landscape Architecture
5000 Glenwood Avenue
Golden Valley, MN 55422
civilsitegroup.com 612-615-0060

PRELIMINARY: NOT FOR CONSTRUCTION

PROJECT
7200 & 7250 FRANCE
7200 & 7250 FRANCE AVE S, EDINA, MN 55435

ORION INVESTMENTS
6550 YORK AVE S SUITE 207, EDINA, MN 55435

I HEREBY CERTIFY THAT THIS PLAN, SPECIFICATION, OR REPORT WAS PREPARED BY ME OR UNDER MY DIRECT SUPERVISION AND THAT I AM A DULY LICENSED PROFESSIONAL ENGINEER UNDER THE LAWS OF THE STATE OF MINNESOTA.

David J. Knaeble
DATE 1/10/23 LICENSE NO. 48776

ISSUE/SUBMITTAL SUMMARY

DATE	DESCRIPTION
06/30/2022	CITY SUBMITTAL
8/12/2022	PUD SUBMISSION
1/10/23	FINAL PUD SUBMITTAL

DRAWN BY: AM REVIEWED BY: DK
PROJECT NUMBER: 21419

REVISION SUMMARY

DATE	DESCRIPTION

PH. 1 (B)
GRADING PLAN

C3.0 B

© COPYRIGHT 2022 CIVIL SITE GROUP INC.

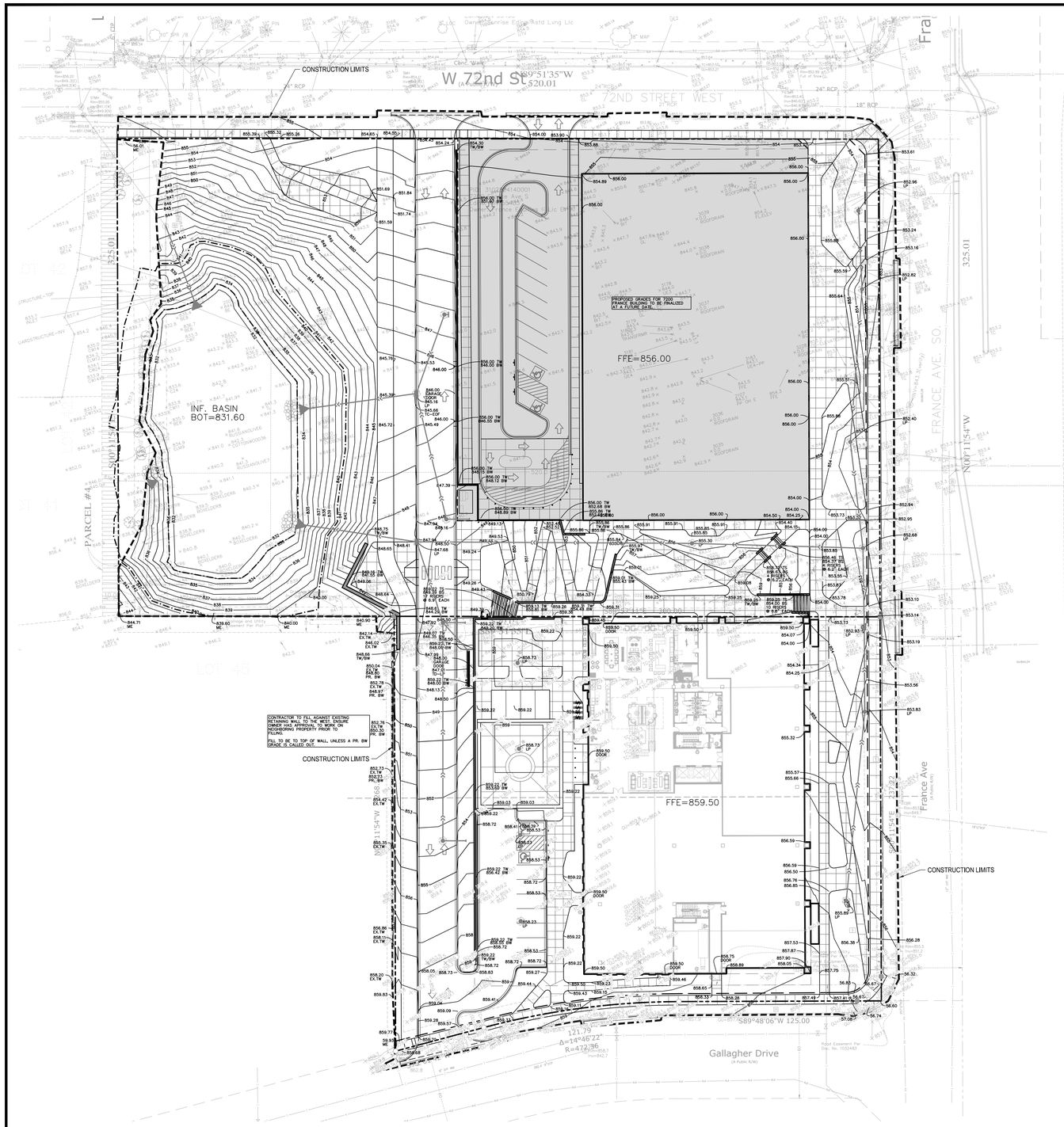

GENERAL GRADING NOTES:

1. **CONTRACTOR SHALL VERIFY ALL BUILDING ELEVATIONS, (FFE, LFE, GFE), PRIOR TO CONSTRUCTION BY CROSS CHECKING WITH ARCHITECTURAL, STRUCTURAL AND CIVIL ELEVATIONS FOR EQUIVALENT "100" ELEVATIONS. THIS MUST BE DONE PRIOR TO EXCAVATION AND INSTALLATION OF ANY FOOTING MATERIALS. VERIFICATION OF THIS COORDINATION SHALL BE CONFIRMED IN WRITING BY CIVIL, SURVEYOR, ARCHITECTURAL, STRUCTURAL AND CONTRACTOR PRIOR TO CONSTRUCTION.**
2. ALL EXISTING UTILITY LOCATIONS SHOWN ARE APPROXIMATE. CONTACT "GOPHER STATE ONE CALL" (651-454-0002 OR 800-252-1166) FOR UTILITY LOCATIONS, 48 HOURS PRIOR TO CONSTRUCTION. THE CONTRACTOR SHALL REPAIR OR REPLACE ANY UTILITIES THAT ARE DAMAGED DURING CONSTRUCTION AT NO COST TO THE OWNER.
3. SEE SITE PLAN FOR HORIZONTAL LAYOUT & GENERAL GRADING NOTES.
4. THE CONTRACTOR SHALL COMPLETE THE SITE GRADING CONSTRUCTION (INCLUDING BUT NOT LIMITED TO SITE PREPARATION, SOIL CORRECTION, EXCAVATION, EMBANKMENT, ETC.) IN ACCORDANCE WITH THE REQUIREMENTS OF THE OWNER'S SOILS ENGINEER. ALL SOIL TESTING SHALL BE COMPLETED BY THE OWNER'S SOILS ENGINEER. THE CONTRACTOR SHALL BE RESPONSIBLE FOR COORDINATING ALL REQUIRED SOIL TESTS AND INSPECTIONS WITH THE SOILS ENGINEER.
5. ANY ELEMENTS OF AN EARTH RETENTION SYSTEM AND RELATED EXCAVATIONS THAT FALL WITHIN THE PUBLIC RIGHT OF WAY WILL REQUIRE A "RIGHT OF WAY EXCAVATION PERMIT". CONTRACTOR IS RESPONSIBLE FOR AQUIRING THIS PERMIT PRIOR TO CONSTRUCTION IF APPLICABLE
6. ALL EXISTING UTILITY LOCATIONS SHOWN ARE APPROXIMATE. CONTACT "GOPHER STATE ONE CALL" (651-454-0002 OR 800-252-1166) FOR UTILITY LOCATIONS, 48 HOURS PRIOR TO CONSTRUCTION. THE CONTRACTOR SHALL REPAIR OR REPLACE ANY UTILITIES THAT ARE DAMAGED DURING CONSTRUCTION AT NO COST TO THE OWNER.
3. GRADING AND EXCAVATION ACTIVITIES SHALL BE PERFORMED IN ACCORDANCE WITH THE NATIONAL POLLUTION DISCHARGE ELIMINATION SYSTEM (NPDES) PERMIT REQUIREMENTS & PERMIT REQUIREMENTS OF THE CITY.
4. PROPOSED SPOT GRADES ARE FLOW-LINE FINISHED GRADE ELEVATIONS, UNLESS OTHERWISE NOTED.
5. GRADES OF WALKS SHALL BE INSTALLED WITH 5% MAX. LONGITUDINAL SLOPE AND 1% MIN. AND 2% MAX. CROSS SLOPE, UNLESS OTHERWISE NOTED.
6. PROPOSED SLOPES SHALL NOT EXCEED 3:1 UNLESS INDICATED OTHERWISE ON THE DRAWINGS. MAXIMUM SLOPES IN MAINTAINED AREAS IS 4:1
7. PROPOSED RETAINING WALLS, FREESTANDING WALLS, OR COMBINATION OF WALL TYPES GREATER THAN 4' IN HEIGHT SHALL BE DESIGNED AND ENGINEERED BY A REGISTERED RETAINING WALL ENGINEER. DESIGN DRAWINGS SHALL BE SUBMITTED FOR REVIEW AND APPROVAL PRIOR TO CONSTRUCTION.
8. THE CONTRACTOR SHALL BE RESPONSIBLE FOR MAINTENANCE OF GRADE STAKES THROUGHOUT THE DURATION OF CONSTRUCTION TO ESTABLISH PROPER GRADES. THE CONTRACTOR SHALL ALSO BE RESPONSIBLE FOR A FINAL FIELD CHECK OF FINISHED GRADES ACCEPTABLE TO THE ENGINEER/LANDSCAPE ARCHITECT PRIOR TO TOPSOIL AND SODDING ACTIVITIES.
9. IF EXCESS OR SHORTAGE OF SOIL MATERIAL EXISTS, THE CONTRACTOR SHALL TRANSPORT ALL EXCESS SOIL MATERIAL OFF THE SITE TO AN AREA SELECTED BY THE CONTRACTOR, OR IMPORT SUITABLE MATERIAL TO THE SITE.
10. EXCAVATE TOPSOIL FROM AREAS TO BE FURTHER EXCAVATED OR REGRADED AND STOCKPILE IN AREAS DESIGNATED ON THE SITE. THE CONTRACTOR SHALL SALVAGE ENOUGH TOPSOIL FOR RESPREADING ON THE SITE AS SPECIFIED. EXCESS TOPSOIL SHALL BE PLACED IN EMBANKMENT AREAS, OUTSIDE OF BUILDING PADS, ROADWAYS AND PARKING AREAS. THE CONTRACTOR SHALL SUBCUT CUT AREAS, WHERE TURF IS TO BE ESTABLISHED, TO A DEPTH OF 6 INCHES. RESPREAD TOPSOIL IN AREAS WHERE TURF IS TO BE ESTABLISHED TO A MINIMUM DEPTH OF 6 INCHES.
11. FINISHED GRADING SHALL BE COMPLETED. THE CONTRACTOR SHALL UNIFORMLY GRADE AREAS WITHIN LIMITS OF GRADING, INCLUDING ADJACENT TRANSITION AREAS. PROVIDE A SMOOTH FINISHED SURFACE WITHIN SPECIFIED TOLERANCES, WITH UNIFORM LEVELS OR SLOPES BETWEEN POINTS WHERE ELEVATIONS ARE SHOWN, OR BETWEEN SUCH POINTS AND EXISTING GRADES. AREAS THAT HAVE BEEN FINISH GRADED SHALL BE PROTECTED FROM SUBSEQUENT CONSTRUCTION OPERATIONS, TRAFFIC AND EROSION. REPAIR ALL AREAS THAT HAVE BECOME RUTTED BY TRAFFIC OR ERODED BY WATER OR HAS SETTLED BELOW THE CORRECT GRADE. ALL AREAS DISTURBED BY THE CONTRACTOR'S OPERATIONS SHALL BE RESTORED TO EQUAL OR BETTER THAN ORIGINAL CONDITION OR TO THE REQUIREMENTS OF THE NEW WORK.
12. PRIOR TO PLACEMENT OF THE AGGREGATE BASE, A TEST ROLL WILL BE REQUIRED ON THE STREET AND/OR PARKING AREA SUBGRADE, THE CONTRACTOR SHALL PROVIDE A LOADED TANDEM AXLE TRUCK WITH A GROSS WEIGHT OF 25 TONS. THE TEST ROLLING SHALL BE AT THE DIRECTION OF THE SOILS ENGINEER AND SHALL BE COMPLETED IN AREAS AS DIRECTED BY THE SOILS ENGINEER. THE SOILS ENGINEER SHALL DETERMINE WHICH SECTIONS OF THE STREET OR PARKING AREA ARE UNSTABLE. CORRECTION OF THE SUBGRADE SOILS SHALL BE COMPLETED IN ACCORDANCE WITH THE REQUIREMENTS OF THE SOILS ENGINEER. NO TEST ROLL SHALL OCCUR WITHIN 10' OF ANY UNDERGROUND STORM RETENTION/DETENTION SYSTEMS.
13. TOLERANCES
    - 13.1. THE BUILDING SUBGRADE FINISHED SURFACE ELEVATION SHALL NOT VARY BY MORE THAN 0.30 FOOT ABOVE, OR 0.30 FOOT BELOW, THE PRESCRIBED ELEVATION AT ANY POINT WHERE MEASUREMENT IS MADE.
    - 13.2. THE STREET OR PARKING AREA SUBGRADE FINISHED SURFACE ELEVATION SHALL NOT VARY BY MORE THAN 0.05 FOOT ABOVE, OR 0.10 FOOT BELOW, THE PRESCRIBED ELEVATION OF ANY POINT WHERE MEASUREMENT IS MADE.
    - 13.3. AREAS WHICH ARE TO RECEIVE TOPSOIL SHALL BE GRADED TO WITHIN 0.30 FOOT ABOVE OR BELOW THE REQUIRED ELEVATION, UNLESS DIRECTED OTHERWISE BY THE ENGINEER.
    - 13.4. TOPSOIL SHALL BE GRADED TO PLUS OR MINUS 1/2 INCH OF THE SPECIFIED THICKNESS.
14. MAINTENANCE
    - 14.1. THE CONTRACTOR SHALL PROTECT NEWLY GRADED AREAS FROM TRAFFIC AND EROSION, AND KEEP AREA FREE OF TRASH AND DEBRIS.
    - 14.2. CONTRACTOR SHALL REPAIR AND REESTABLISH GRADES IN SETTLED, ERODED AND RUTTED AREAS TO SPECIFIED TOLERANCES. DURING THE CONSTRUCTION, IF REQUIRED, AND DURING THE WARRANTY PERIOD, ERODED AREAS WHERE TURF IS TO BE ESTABLISHED SHALL BE RESEEDED AND MULCHED.
    - 14.3. WHERE COMPLETED COMPACTED AREAS ARE DISTURBED BY SUBSEQUENT CONSTRUCTION OPERATIONS OR ADVERSE WEATHER, CONTRACTOR SHALL SCARIFY, SURFACE, RESHAPE, AND COMPACT TO REQUIRED DENSITY PRIOR TO FURTHER CONSTRUCTION.

CITY OF EDINA GRADING NOTES:

1. RESERVED FOR CITY SPECIFIC GRADING NOTES.

EROSION CONTROL NOTES:

SEE SWPPP ON SHEETS SW1.0 - SW1.6

GROUNDWATER INFORMATION:

PER GEOTECHNICAL REPORT BY NORTHERN TECHNOLOGIES, INC., DATED 04-09-14
GROUNDWATER WAS OBSERVED AT ELEVATIONS RANGING FROM 817.3 TO 818.8.

GRADING PLAN LEGEND:

	PHASE II CONSTRUCTION LIMITS
1125	EX. 1' CONTOUR ELEVATION INTERVAL
1137	1.0' CONTOUR ELEVATION INTERVAL
41.26	SPOT GRADE ELEVATION (GUTTER/FLOW LINE UNLESS OTHERWISE NOTED)
891.00 G	SPOT GRADE ELEVATION GUTTER
891.00 TC	SPOT GRADE ELEVATION TOP OF CURB
891.00 BS/TS	SPOT GRADE ELEVATION BOTTOM OF STAIRS/TOP OF STAIRS
891.00 ME	SPOT GRADE ELEVATION MATCH EXISTING
GB	GRADE BREAK - HIGH POINTS
TO	CURB AND GUTTER (T.O = TIP OUT)
EOF=1135.52	EMERGENCY OVERFLOW

Know what's **below.** **Call** before you dig.

1" = 30'-0"
15'-0" 0 30'-0"

CivilSite GROUP
Civil Engineering • Surveying • Landscape Architecture
5000 Glenwood Avenue
Golden Valley, MN 55422
civilsitegroup.com 612-615-0060

PRELIMINARY: NOT FOR CONSTRUCTION

PROJECT
7200 & 7250 FRANCE
7200 & 7250 FRANCE AVE S, EDINA, MN 55435

ORION INVESTMENTS
6550 YORK AVE S SUITE 207, EDINA, MN 55435

I HEREBY CERTIFY THAT THIS PLAN, SPECIFICATION, OR REPORT WAS PREPARED BY ME OR UNDER MY DIRECT SUPERVISION AND THAT I AM A DULY LICENSED PROFESSIONAL ENGINEER UNDER THE LAWS OF THE STATE OF MINNESOTA.

David J. Knaeble
DATE 1/10/23 LICENSE NO. 48776

ISSUE/SUBMITTAL SUMMARY

DATE	DESCRIPTION
06/30/2022	CITY SUBMITTAL
8/12/2022	PUD SUBMISSION
1/10/23	FINAL PUD SUBMITTAL

DRAWN BY: AM REVIEWED BY: DK
PROJECT NUMBER: 21419

REVISION SUMMARY

DATE	DESCRIPTION

PH. 2 GRADING PLAN

C3.1

© COPYRIGHT 2022 CIVIL SITE GROUP INC.

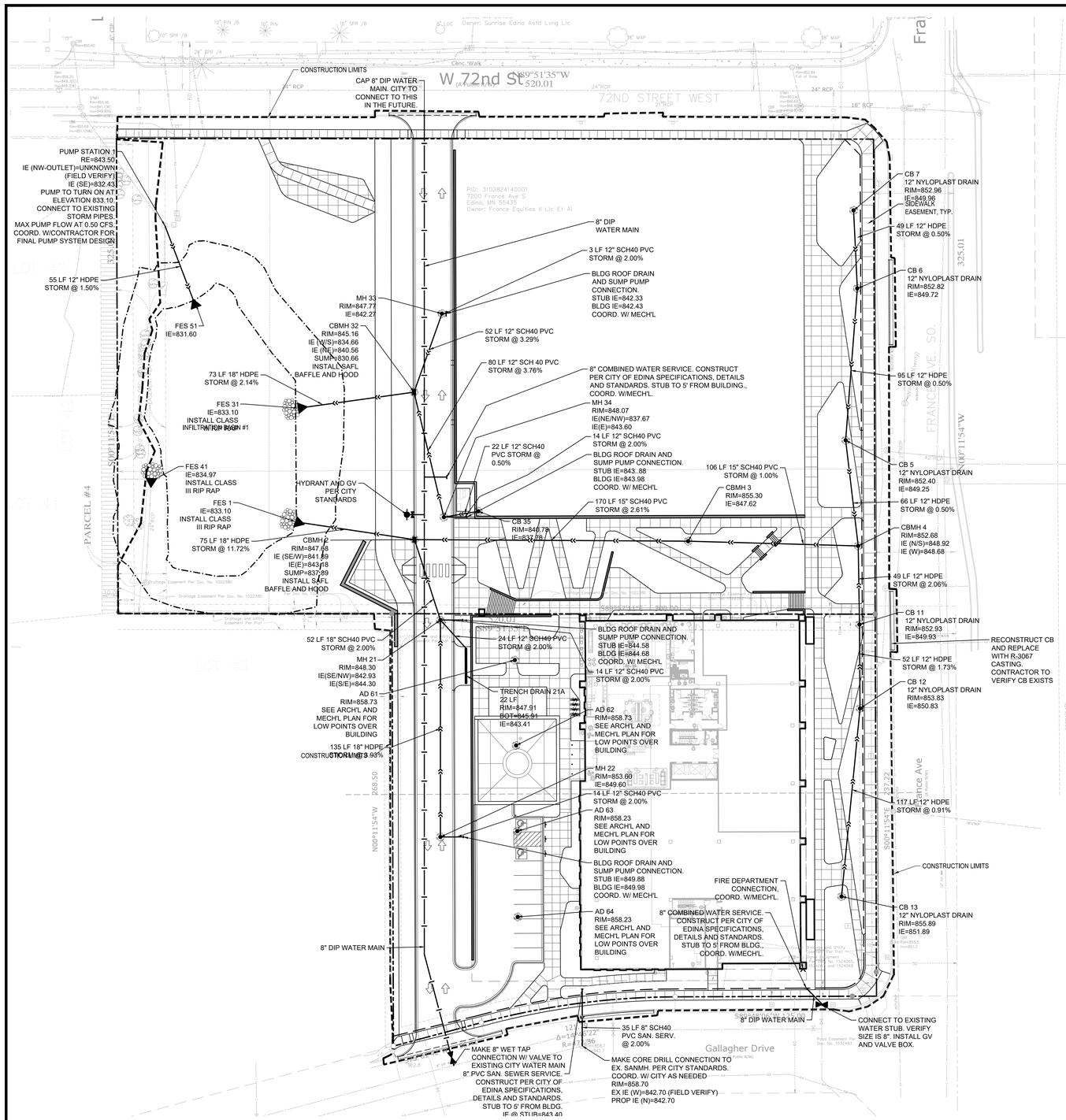

GENERAL UTILITY NOTES:

1. SEE SITE PLAN FOR HORIZONTAL DIMENSIONS AND LAYOUT.
2. CONTRACTOR SHALL FIELD VERIFY LOCATION AND ELEVATION OF EXISTING UTILITIES AND TOPOGRAPHIC FEATURES PRIOR TO CONSTRUCTION. THE CONTRACTOR SHALL IMMEDIATELY NOTIFY THE ENGINEER OF DISCREPANCIES OR VARIATIONS FROM THE PLANS.
3. ALL EXISTING UTILITY LOCATIONS SHOWN ARE APPROXIMATE. CONTACT "GOPHER STATE ONE CALL" (651-454-0002 OR 800-252-1166) FOR UTILITY LOCATIONS, 48 HOURS PRIOR TO CONSTRUCTION. THE CONTRACTOR SHALL REPAIR OR REPLACE ANY UTILITIES THAT ARE DAMAGED DURING CONSTRUCTION AT NO COST TO THE OWNER.
4. UTILITY INSTALLATION SHALL CONFORM TO THE CURRENT EDITION OF "STANDARD SPECIFICATIONS FOR WATER MAIN AND SERVICE LINE INSTALLATION" AND "SANITARY SEWER AND STORM SEWER INSTALLATION" AS PREPARED BY THE CITY ENGINEERS ASSOCIATION OF MINNESOTA (CEAM), AND SHALL CONFORM WITH THE REQUIREMENTS OF THE CITY AND THE PROJECT SPECIFICATIONS.
5. CASTINGS SHALL BE SALVAGED FROM STRUCTURE REMOVALS AND RE-USED OR PLACED AT THE DIRECTION OF THE OWNER.
6. ALL WATER PIPE SHALL BE CLASS 52 DUCTILE IRON PIPE (DIP) AWWA C151, ASME B16.4, AWWA C110, AWWA C153 UNLESS OTHERWISE NOTED.
7. ALL SANITARY SEWER SHALL BE SDR 26 POLYVINYL CHLORIDE (PVC) ASTM D3034 & F679, OR SCH 40 ASTM D1785, 2665, ASTM F794, 1866) UNLESS OTHERWISE NOTED.
8. ALL STORM SEWER PIPE SHALL BE HDPE ASTM F714 & F2306 WITH ASTM D3212 SPEC FITTINGS UNLESS OTHERWISE NOTED.
9. PIPE LENGTHS SHOWN ARE FROM CENTER TO CENTER OF STRUCTURE OR TO END OF FLARED END SECTION.
10. UTILITIES ON THE PLAN ARE SHOWN TO WITHIN 5' OF THE BUILDING FOOTPRINT. THE CONTRACTOR IS ULTIMATELY RESPONSIBLE FOR THE FINAL CONNECTION TO BUILDING LINES. COORDINATE WITH ARCHITECTURAL AND MECHANICAL PLANS.
11. CATCH BASINS AND MANHOLES IN PAVED AREAS SHALL BE SUMPED 0.04 FEET. ALL CATCH BASINS IN GUTTERS SHALL BE SUMPED 0.15 FEET PER DETAILS. RIM ELEVATIONS SHOWN ON THIS PLAN DO NOT REFLECT SUMPED ELEVATIONS.
12. ALL FIRE HYDRANTS SHALL BE LOCATED 5 FEET BEHIND BACK OF CURB UNLESS OTHERWISE NOTED.
13. HYDRANT TYPE, VALVE, AND CONNECTION SHALL BE IN ACCORDANCE WITH CITY REQUIREMENTS. HYDRANT EXTENSIONS ARE INCIDENTAL.
14. A MINIMUM OF 8 FEET OF COVER IS REQUIRED OVER ALL WATERMAIN, UNLESS OTHERWISE NOTED. EXTRA DEPTH MAY BE REQUIRED TO MAINTAIN A MINIMUM OF 18" VERTICAL SEPARATION TO SANITARY OR STORM SEWER LINES. EXTRA DEPTH WATERMAIN IS INCIDENTAL.
15. A MINIMUM OF 18 INCHES OF VERTICAL SEPARATION AND 10 FEET OF HORIZONTAL SEPARATION IS REQUIRED FOR ALL UTILITIES, UNLESS OTHERWISE NOTED.
16. ALL CONNECTIONS TO EXISTING UTILITIES SHALL BE IN ACCORDANCE WITH CITY STANDARDS AND COORDINATED WITH THE CITY PRIOR TO CONSTRUCTION.
17. CONNECTIONS TO EXISTING STRUCTURES SHALL BE CORE-DRILLED.
18. COORDINATE LOCATIONS AND SIZES OF SERVICE CONNECTIONS WITH THE MECHANICAL DRAWINGS.
19. COORDINATE INSTALLATION AND SCHEDULING OF THE INSTALLATION OF UTILITIES WITH ADJACENT CONTRACTORS AND CITY STAFF.
20. ALL STREET REPAIRS AND PATCHING SHALL BE PERFORMED PER THE REQUIREMENTS OF THE CITY. ALL PAVEMENT CONNECTIONS SHALL BE SAWCUT. ALL TRAFFIC CONTROLS SHALL BE PROVIDED BY THE CONTRACTOR AND SHALL BE ESTABLISHED PER THE REQUIREMENTS OF THE MINNESOTA MANUAL ON UNIFORM TRAFFIC CONTROL DEVICES (MMUTCD) AND THE CITY. THIS SHALL INCLUDE BUT NOT BE LIMITED TO SIGNAGE, BARRICADES, FLASHERS, AND FLAGGERS AS NEEDED. ALL PUBLIC STREETS SHALL BE OPEN TO TRAFFIC AT ALL TIMES. NO ROAD CLOSURES SHALL BE PERMITTED WITHOUT APPROVAL BY THE CITY.
21. ALL STRUCTURES, PUBLIC AND PRIVATE, SHALL BE ADJUSTED TO PROPOSED GRADES WHERE REQUIRED. THE REQUIREMENTS OF ALL OWNERS MUST BE COMPLIED WITH. STRUCTURES BEING RESET TO PAVED AREAS MUST MEET OWNERS REQUIREMENTS FOR TRAFFIC LOADING.
22. CONTRACTOR SHALL COORDINATE ALL WORK WITH PRIVATE UTILITY COMPANIES.
23. CONTRACTOR SHALL COORDINATE CONNECTION OF IRRIGATION SERVICE TO UTILITIES. COORDINATE THE INSTALLATION OF IRRIGATION SLEEVES NECESSARY AS TO NOT IMPACT INSTALLATION OF UTILITIES.
24. CONTRACTOR SHALL MAINTAIN AS-BUILT PLANS THROUGHOUT CONSTRUCTION AND SUBMIT THESE PLANS TO ENGINEER UPON COMPLETION OF WORK.
25. ALL JOINTS AND CONNECTIONS IN STORM SEWER SYSTEM SHALL BE GASTIGHT OR WATERTIGHT. APPROVED RESILIENT RUBBER JOINTS MUST BE USED TO MAKE WATERTIGHT CONNECTIONS TO MANHOLES, CATCHBASINS, OR OTHER STRUCTURES.
26. ALL PORTIONS OF THE STORM SEWER SYSTEM LOCATED WITHIN 10 FEET OF THE BUILDING OR WATER SERVICE LINE MUST BE TESTED IN ACCORDANCE WITH MN RULES, CHAPTER 4714, SECTION 1109.0.
27. FOR ALL SITES LOCATED IN CLAY SOIL AREAS, DRAIN TILE MUST BE INSTALLED AT ALL LOW POINT CATCH BASINS 25' IN EACH DIRECTION. SEE PLAN AND DETAIL. INSTALL LOW POINT DRAIN TILE PER PLANS AND GEOTECHNICAL REPORT RECOMMENDATIONS AND REQUIREMENTS.

CITY OF EDINA UTILITY NOTES:

1. CONTRACTOR MUST APPLY FOR A SEWER AND WATER CONNECTION PERMIT WITH THE CITY OF EDINA PUBLIC WORKS PRIOR TO CONSTRUCTION.
2. DISCONNECTED SANITARY AND WATER SERVICES TO BE CAPPED AT MAIN.

UTILITY LEGEND:

- CATCH BASIN
- MANHOLE
- GATE VALVE AND VALVE BOX
- PROPOSED FIRE HYDRANT
- WATER MAIN
- SANITARY SEWER
- STORM SEWER
- FES AND RIP RAP

Know what's **below.** **Call** before you dig.

1" = 30'-0"
15'-0" 0 30'-0"

CivilSite GROUP
Civil Engineering • Surveying • Landscape Architecture
5000 Glenwood Avenue
Golden Valley, MN 55422
civilsitegroup.com 612-615-0060

PRELIMINARY: NOT FOR CONSTRUCTION

PROJECT

7200 & 7250 FRANCE

7200 & 7250 FRANCE AVE S, EDINA, MN 55435

ORION INVESTMENTS

6550 YORK AVE S SUITE 207, EDINA, MN 55435

I HEREBY CERTIFY THAT THIS PLAN, SPECIFICATION, OR REPORT WAS PREPARED BY ME OR UNDER MY DIRECT SUPERVISION AND THAT I AM A DULY LICENSED PROFESSIONAL ENGINEER UNDER THE LAWS OF THE STATE OF MINNESOTA.

David J. Knaeble

DATE 1/10/23 LICENSE NO. 48776

ISSUE/SUBMITTAL SUMMARY

DATE	DESCRIPTION
06/30/2022	CITY SUBMITTAL
8/12/2022	PUD SUBMISSION
1/10/23	FINAL PUD SUBMITTAL

DRAWN BY: AM REVIEWED BY: DK

PROJECT NUMBER: 21419

REVISION SUMMARY

DATE	DESCRIPTION

PH. 1 (A) UTILITY PLAN

C4.0 A

© COPYRIGHT 2022 CIVIL SITE GROUP INC

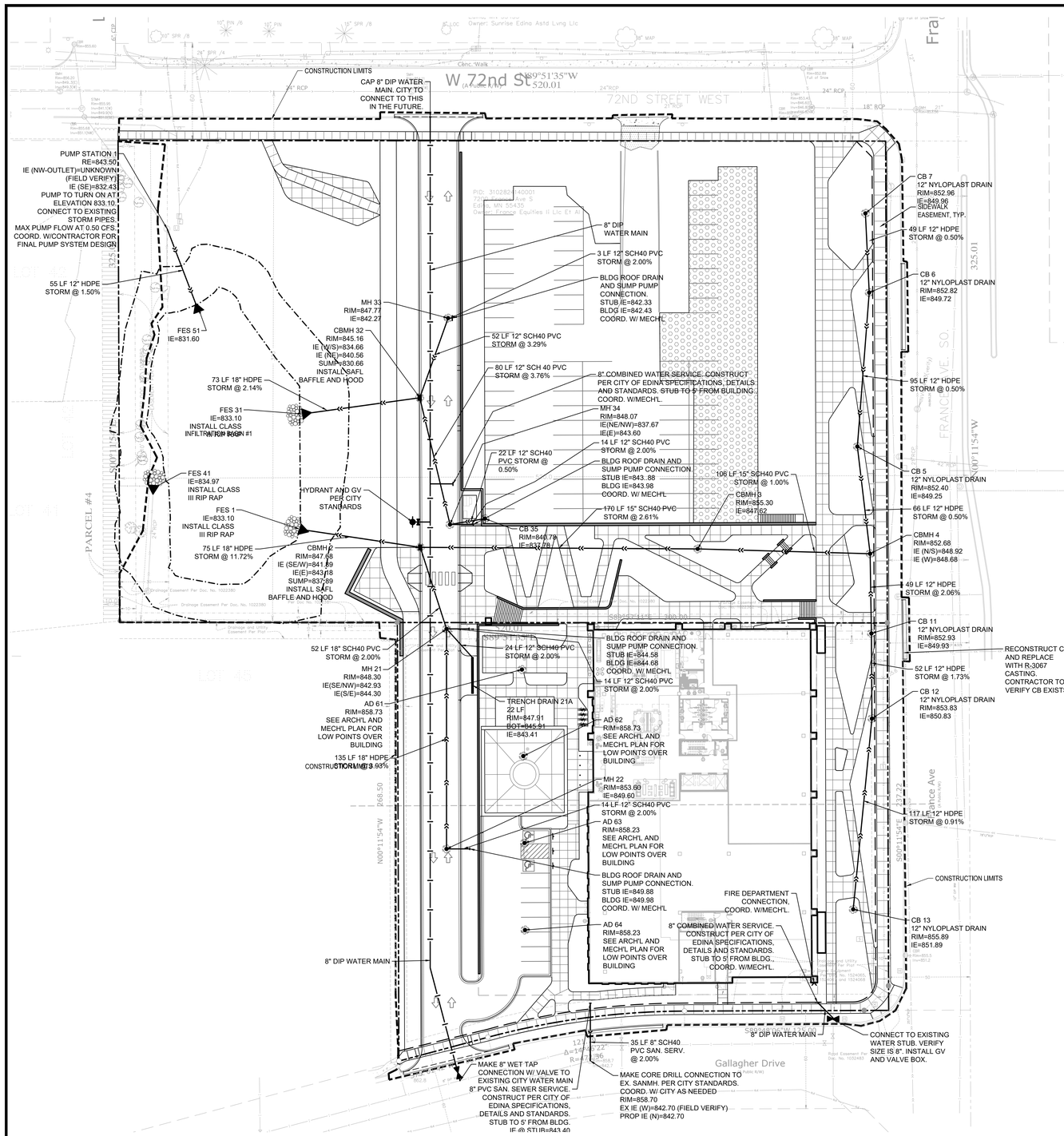

GENERAL UTILITY NOTES:

1. SEE SITE PLAN FOR HORIZONTAL DIMENSIONS AND LAYOUT.
2. CONTRACTOR SHALL FIELD VERIFY LOCATION AND ELEVATION OF EXISTING UTILITIES AND TOPOGRAPHIC FEATURES PRIOR TO CONSTRUCTION. THE CONTRACTOR SHALL IMMEDIATELY NOTIFY THE ENGINEER OF DISCREPANCIES OR VARIATIONS FROM THE PLANS.
3. ALL EXISTING UTILITY LOCATIONS SHOWN ARE APPROXIMATE. CONTACT "GOPHER STATE ONE CALL" (651-454-0002 OR 800-252-1166) FOR UTILITY LOCATIONS, 48 HOURS PRIOR TO CONSTRUCTION. THE CONTRACTOR SHALL REPAIR OR REPLACE ANY UTILITIES THAT ARE DAMAGED DURING CONSTRUCTION AT NO COST TO THE OWNER.
4. UTILITY INSTALLATION SHALL CONFORM TO THE CURRENT EDITION OF "STANDARD SPECIFICATIONS FOR WATER MAIN AND SERVICE LINE INSTALLATION" AND "SANITARY SEWER AND STORM SEWER INSTALLATION" AS PREPARED BY THE CITY ENGINEERS ASSOCIATION OF MINNESOTA (CEAM), AND SHALL CONFORM WITH THE REQUIREMENTS OF THE CITY AND THE PROJECT SPECIFICATIONS.
5. CASTINGS SHALL BE SALVAGED FROM STRUCTURE REMOVALS AND RE-USED OR PLACED AT THE DIRECTION OF THE OWNER.
6. ALL WATER PIPE SHALL BE CLASS 52 DUCTILE IRON PIPE (DIP) AWWA C151, ASME B16.4, AWWA C110, AWWA C153 UNLESS OTHERWISE NOTED.
7. ALL SANITARY SEWER SHALL BE SDR 26 POLYVINYL CHLORIDE (PVC) ASTM D3034 & F679, OR SCH 40 ASTM D1785, 2665, ASTM F794, 1866) UNLESS OTHERWISE NOTED.
8. ALL STORM SEWER PIPE SHALL BE HDPE ASTM F714 & F2306 WITH ASTM D3212 SPEC FITTINGS UNLESS OTHERWISE NOTED.
9. PIPE LENGTHS SHOWN ARE FROM CENTER TO CENTER OF STRUCTURE OR TO END OF FLARED END SECTION.
10. UTILITIES ON THE PLAN ARE SHOWN TO WITHIN 5' OF THE BUILDING FOOTPRINT. THE CONTRACTOR IS ULTIMATELY RESPONSIBLE FOR THE FINAL CONNECTION TO BUILDING LINES. COORDINATE WITH ARCHITECTURAL AND MECHANICAL PLANS.
11. CATCH BASINS AND MANHOLES IN PAVED AREAS SHALL BE SUMPED 0.04 FEET. ALL CATCH BASINS IN GUTTERS SHALL BE SUMPED 0.15 FEET PER DETAILS. RIM ELEVATIONS SHOWN ON THIS PLAN DO NOT REFLECT SUMPED ELEVATIONS.
12. ALL FIRE HYDRANTS SHALL BE LOCATED 5 FEET BEHIND BACK OF CURB UNLESS OTHERWISE NOTED.
13. HYDRANT TYPE, VALVE, AND CONNECTION SHALL BE IN ACCORDANCE WITH CITY REQUIREMENTS. HYDRANT EXTENSIONS ARE INCIDENTAL.
14. A MINIMUM OF 8 FEET OF COVER IS REQUIRED OVER ALL WATERMAIN, UNLESS OTHERWISE NOTED. EXTRA DEPTH MAY BE REQUIRED TO MAINTAIN A MINIMUM OF 18" VERTICAL SEPARATION TO SANITARY OR STORM SEWER LINES. EXTRA DEPTH WATERMAIN IS INCIDENTAL.
15. A MINIMUM OF 18 INCHES OF VERTICAL SEPARATION AND 10 FEET OF HORIZONTAL SEPARATION IS REQUIRED FOR ALL UTILITIES, UNLESS OTHERWISE NOTED.
16. ALL CONNECTIONS TO EXISTING UTILITIES SHALL BE IN ACCORDANCE WITH CITY STANDARDS AND COORDINATED WITH THE CITY PRIOR TO CONSTRUCTION.
17. CONNECTIONS TO EXISTING STRUCTURES SHALL BE CORE-DRILLED.
18. COORDINATE LOCATIONS AND SIZES OF SERVICE CONNECTIONS WITH THE MECHANICAL DRAWINGS.
19. COORDINATE INSTALLATION AND SCHEDULING OF THE INSTALLATION OF UTILITIES WITH ADJACENT CONTRACTORS AND CITY STAFF.
20. ALL STREET REPAIRS AND PATCHING SHALL BE PERFORMED PER THE REQUIREMENTS OF THE CITY. ALL PAVEMENT CONNECTIONS SHALL BE SAWCUT. ALL TRAFFIC CONTROLS SHALL BE PROVIDED BY THE CONTRACTOR AND SHALL BE ESTABLISHED PER THE REQUIREMENTS OF THE MINNESOTA MANUAL ON UNIFORM TRAFFIC CONTROL DEVICES (MMUTCD) AND THE CITY. THIS SHALL INCLUDE BUT NOT BE LIMITED TO SIGNAGE, BARRICADES, FLASHERS, AND FLAGGERS AS NEEDED. ALL PUBLIC STREETS SHALL BE OPEN TO TRAFFIC AT ALL TIMES. NO ROAD CLOSURES SHALL BE PERMITTED WITHOUT APPROVAL BY THE CITY.
21. ALL STRUCTURES, PUBLIC AND PRIVATE, SHALL BE ADJUSTED TO PROPOSED GRADES WHERE REQUIRED. THE REQUIREMENTS OF ALL OWNERS MUST BE COMPLIED WITH. STRUCTURES BEING RESET TO PAVED AREAS MUST MEET OWNERS REQUIREMENTS FOR TRAFFIC LOADING.
22. CONTRACTOR SHALL COORDINATE ALL WORK WITH PRIVATE UTILITY COMPANIES.
23. CONTRACTOR SHALL COORDINATE CONNECTION OF IRRIGATION SERVICE TO UTILITIES. COORDINATE THE INSTALLATION OF IRRIGATION SLEEVES NECESSARY AS TO NOT IMPACT INSTALLATION OF UTILITIES.
24. CONTRACTOR SHALL MAINTAIN AS-BUILT PLANS THROUGHOUT CONSTRUCTION AND SUBMIT THESE PLANS TO ENGINEER UPON COMPLETION OF WORK.
25. ALL JOINTS AND CONNECTIONS IN STORM SEWER SYSTEM SHALL BE GASTIGHT OR WATERTIGHT. APPROVED RESILIENT RUBBER JOINTS MUST BE USED TO MAKE WATERTIGHT CONNECTIONS TO MANHOLES, CATCHBASINS, OR OTHER STRUCTURES.
26. ALL PORTIONS OF THE STORM SEWER SYSTEM LOCATED WITHIN 10 FEET OF THE BUILDING OR WATER SERVICE LINE MUST BE TESTED IN ACCORDANCE WITH MN RULES, CHAPTER 4714, SECTION 1109.0.
27. FOR ALL SITES LOCATED IN CLAY SOIL AREAS, DRAIN TILE MUST BE INSTALLED AT ALL LOW POINT CATCH BASINS 25' IN EACH DIRECTION. SEE PLAN AND DETAIL. INSTALL LOW POINT DRAIN TILE PER PLANS AND GEOTECHNICAL REPORT RECOMMENDATIONS AND REQUIREMENTS.

CITY OF EDINA UTILITY NOTES:

1. CONTRACTOR MUST APPLY FOR A SEWER AND WATER CONNECTION PERMIT WITH THE CITY OF EDINA PUBLIC WORKS PRIOR TO CONSTRUCTION.
2. DISCONNECTED SANITARY AND WATER SERVICES TO BE CAPPED AT MAIN.

UTILITY LEGEND:

- CATCH BASIN
- MANHOLE
- GATE VALVE AND VALVE BOX
- PROPOSED FIRE HYDRANT
- WATER MAIN
- SANITARY SEWER
- STORM SEWER
- FES AND RIP RAP

Know what's **below.** **Call** before you dig.

1" = 30'-0"
15'-0" 0 30'-0"

CivilSite GROUP
Civil Engineering • Surveying • Landscape Architecture
5000 Glenwood Avenue
Golden Valley, MN 55422
civilsitegroup.com 612-615-0060

PRELIMINARY: NOT FOR CONSTRUCTION

PROJECT
7200 & 7250 FRANCE
7200 & 7250 FRANCE AVE S, EDINA, MN 55435

ORION INVESTMENTS
6550 YORK AVE S SUITE 207, EDINA, MN 55435

I HEREBY CERTIFY THAT THIS PLAN, SPECIFICATION, OR REPORT WAS PREPARED BY ME OR UNDER MY DIRECT SUPERVISION AND THAT I AM A DULY LICENSED PROFESSIONAL ENGINEER UNDER THE LAWS OF THE STATE OF MINNESOTA.

David J. Knaeble
DATE 1/10/23 LICENSE NO. 48776

ISSUE/SUBMITTAL SUMMARY

DATE	DESCRIPTION
06/30/2022	CITY SUBMITTAL
8/12/2022	PUD SUBMISSION
1/10/23	FINAL PUD SUBMITTAL

DRAWN BY: AM REVIEWED BY: DK
PROJECT NUMBER: 21419

REVISION SUMMARY

DATE	DESCRIPTION

PH. 1 (B) UTILITY PLAN

C4.0 B

© COPYRIGHT 2022 CIVIL SITE GROUP INC

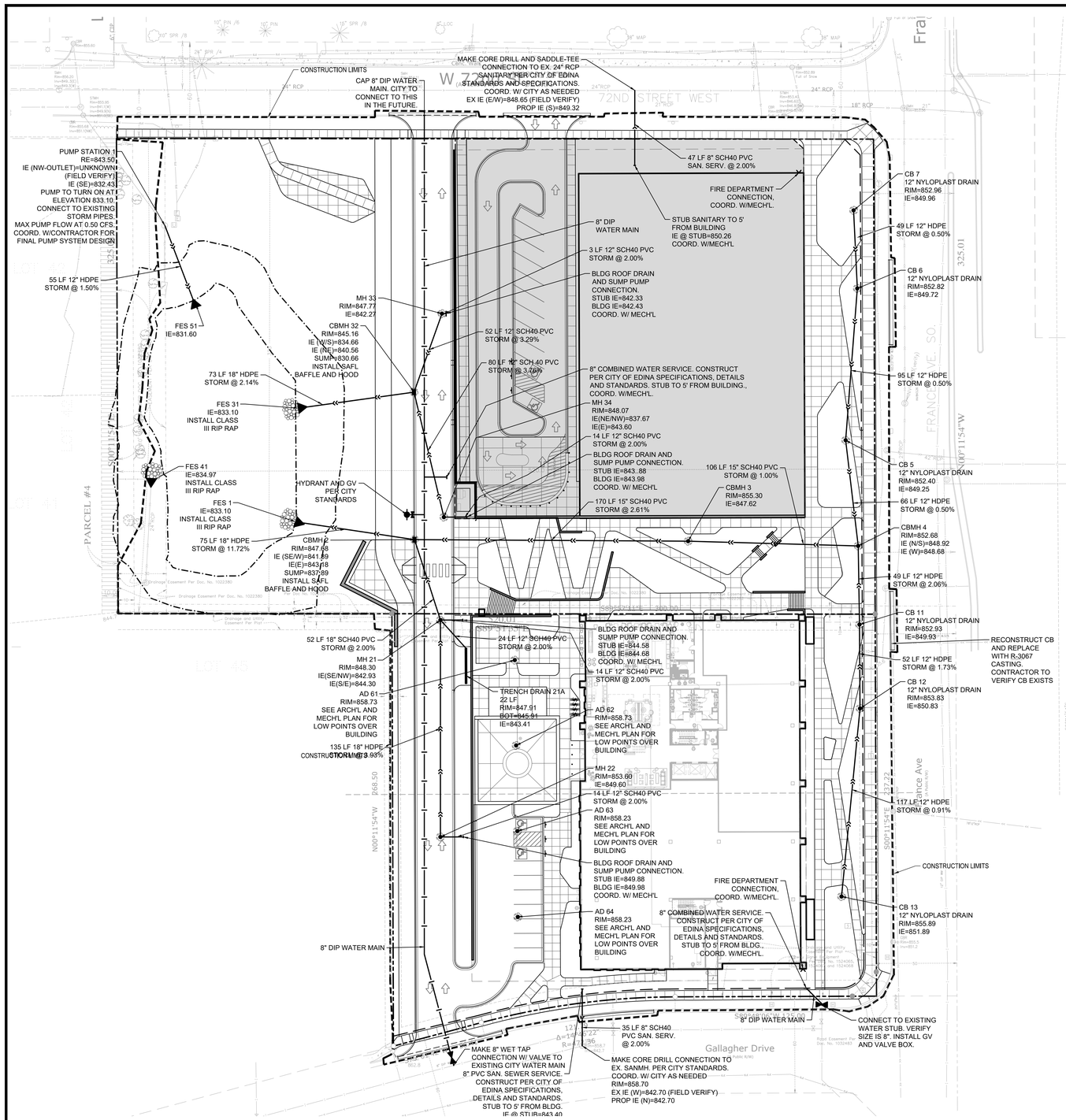

GENERAL UTILITY NOTES:

1. SEE SITE PLAN FOR HORIZONTAL DIMENSIONS AND LAYOUT.
2. CONTRACTOR SHALL FIELD VERIFY LOCATION AND ELEVATION OF EXISTING UTILITIES AND TOPOGRAPHIC FEATURES PRIOR TO CONSTRUCTION. THE CONTRACTOR SHALL IMMEDIATELY NOTIFY THE ENGINEER OF DISCREPANCIES OR VARIATIONS FROM THE PLANS.
3. ALL EXISTING UTILITY LOCATIONS SHOWN ARE APPROXIMATE. CONTACT "GOPHER STATE ONE CALL" (651-454-0002 OR 800-252-1166) FOR UTILITY LOCATIONS, 48 HOURS PRIOR TO CONSTRUCTION. THE CONTRACTOR SHALL REPAIR OR REPLACE ANY UTILITIES THAT ARE DAMAGED DURING CONSTRUCTION AT NO COST TO THE OWNER.
4. UTILITY INSTALLATION SHALL CONFORM TO THE CURRENT EDITION OF "STANDARD SPECIFICATIONS FOR WATER MAIN AND SERVICE LINE INSTALLATION" AND "SANITARY SEWER AND STORM SEWER INSTALLATION" AS PREPARED BY THE CITY ENGINEERS ASSOCIATION OF MINNESOTA (CEAM), AND SHALL CONFORM WITH THE REQUIREMENTS OF THE CITY AND THE PROJECT SPECIFICATIONS.
5. CASTINGS SHALL BE SALVAGED FROM STRUCTURE REMOVALS AND RE-USED OR PLACED AT THE DIRECTION OF THE OWNER.
6. ALL WATER PIPE SHALL BE CLASS 52 DUCTILE IRON PIPE (DIP) AWWA C151, ASME B16.4, AWWA C110, AWWA C153 UNLESS OTHERWISE NOTED.
7. ALL SANITARY SEWER SHALL BE SDR 26 POLYVINYL CHLORIDE (PVC) ASTM D3034 & F679, OR SCH 40 ASTM D1785, 2665, ASTM F794, 1866) UNLESS OTHERWISE NOTED.
8. ALL STORM SEWER PIPE SHALL BE HDPE ASTM F714 & F2306 WITH ASTM D3212 SPEC FITTINGS UNLESS OTHERWISE NOTED.
9. PIPE LENGTHS SHOWN ARE FROM CENTER TO CENTER OF STRUCTURE OR TO END OF FLARED END SECTION.
10. UTILITIES ON THE PLAN ARE SHOWN TO WITHIN 5' OF THE BUILDING FOOTPRINT. THE CONTRACTOR IS ULTIMATELY RESPONSIBLE FOR THE FINAL CONNECTION TO BUILDING LINES. COORDINATE WITH ARCHITECTURAL AND MECHANICAL PLANS.
11. CATCH BASINS AND MANHOLES IN PAVED AREAS SHALL BE SUMPED 0.04 FEET. ALL CATCH BASINS IN GUTTERS SHALL BE SUMPED 0.15 FEET PER DETAILS. RIM ELEVATIONS SHOWN ON THIS PLAN DO NOT REFLECT SUMPED ELEVATIONS.
12. ALL FIRE HYDRANTS SHALL BE LOCATED 5 FEET BEHIND BACK OF CURB UNLESS OTHERWISE NOTED.
13. HYDRANT TYPE, VALVE, AND CONNECTION SHALL BE IN ACCORDANCE WITH CITY REQUIREMENTS. HYDRANT EXTENSIONS ARE INCIDENTAL.
14. A MINIMUM OF 8 FEET OF COVER IS REQUIRED OVER ALL WATERMAIN, UNLESS OTHERWISE NOTED. EXTRA DEPTH MAY BE REQUIRED TO MAINTAIN A MINIMUM OF 18" VERTICAL SEPARATION TO SANITARY OR STORM SEWER LINES. EXTRA DEPTH WATERMAIN IS INCIDENTAL.
15. A MINIMUM OF 18 INCHES OF VERTICAL SEPARATION AND 10 FEET OF HORIZONTAL SEPARATION IS REQUIRED FOR ALL UTILITIES, UNLESS OTHERWISE NOTED.
16. ALL CONNECTIONS TO EXISTING UTILITIES SHALL BE IN ACCORDANCE WITH CITY STANDARDS AND COORDINATED WITH THE CITY PRIOR TO CONSTRUCTION.
17. CONNECTIONS TO EXISTING STRUCTURES SHALL BE CORE-DRILLED.
18. COORDINATE LOCATIONS AND SIZES OF SERVICE CONNECTIONS WITH THE MECHANICAL DRAWINGS.
19. COORDINATE INSTALLATION AND SCHEDULING OF THE INSTALLATION OF UTILITIES WITH ADJACENT CONTRACTORS AND CITY STAFF.
20. ALL STREET REPAIRS AND PATCHING SHALL BE PERFORMED PER THE REQUIREMENTS OF THE CITY. ALL PAVEMENT CONNECTIONS SHALL BE SAWCUT. ALL TRAFFIC CONTROLS SHALL BE PROVIDED BY THE CONTRACTOR AND SHALL BE ESTABLISHED PER THE REQUIREMENTS OF THE MINNESOTA MANUAL ON UNIFORM TRAFFIC CONTROL DEVICES (MMUTCD) AND THE CITY. THIS SHALL INCLUDE BUT NOT BE LIMITED TO SIGNAGE, BARRICADES, FLASHERS, AND FLAGGERS AS NEEDED. ALL PUBLIC STREETS SHALL BE OPEN TO TRAFFIC AT ALL TIMES. NO ROAD CLOSURES SHALL BE PERMITTED WITHOUT APPROVAL BY THE CITY.
21. ALL STRUCTURES, PUBLIC AND PRIVATE, SHALL BE ADJUSTED TO PROPOSED GRADES WHERE REQUIRED. THE REQUIREMENTS OF ALL OWNERS MUST BE COMPLIED WITH. STRUCTURES BEING RESET TO PAVED AREAS MUST MEET OWNERS REQUIREMENTS FOR TRAFFIC LOADING.
22. CONTRACTOR SHALL COORDINATE ALL WORK WITH PRIVATE UTILITY COMPANIES.
23. CONTRACTOR SHALL COORDINATE CONNECTION OF IRRIGATION SERVICE TO UTILITIES. COORDINATE THE INSTALLATION OF IRRIGATION SLEEVES NECESSARY AS TO NOT IMPACT INSTALLATION OF UTILITIES.
24. CONTRACTOR SHALL MAINTAIN AS-BUILT PLANS THROUGHOUT CONSTRUCTION AND SUBMIT THESE PLANS TO ENGINEER UPON COMPLETION OF WORK.
25. ALL JOINTS AND CONNECTIONS IN STORM SEWER SYSTEM SHALL BE GASTIGHT OR WATERTIGHT. APPROVED RESILIENT RUBBER JOINTS MUST BE USED TO MAKE WATERTIGHT CONNECTIONS TO MANHOLES, CATCHBASINS, OR OTHER STRUCTURES.
26. ALL PORTIONS OF THE STORM SEWER SYSTEM LOCATED WITHIN 10 FEET OF THE BUILDING OR WATER SERVICE LINE MUST BE TESTED IN ACCORDANCE WITH MN RULES, CHAPTER 4714, SECTION 1109.0.
27. FOR ALL SITES LOCATED IN CLAY SOIL AREAS, DRAIN TILE MUST BE INSTALLED AT ALL LOW POINT CATCH BASINS 25' IN EACH DIRECTION. SEE PLAN AND DETAIL. INSTALL LOW POINT DRAIN TILE PER PLANS AND GEOTECHNICAL REPORT RECOMMENDATIONS AND REQUIREMENTS.

CITY OF EDINA UTILITY NOTES:

1. RESERVED FOR CITY SPECIFIC UTILITY NOTES.

UTILITY LEGEND:

- PHASE II CONSTRUCTION LIMITS
- CATCH BASIN
- MANHOLE
- GATE VALVE AND VALVE BOX
- PROPOSED FIRE HYDRANT
- WATER MAIN
- SANITARY SEWER
- STORM SEWER
- FES AND RIP RAP

Know what's **below.** **Call** before you dig.

1" = 30'-0"
15'-0" 0 30'-0"

CivilSite GROUP
Civil Engineering • Surveying • Landscape Architecture
5000 Glenwood Avenue
Golden Valley, MN 55422
civilsitegroup.com 612-615-0060

PRELIMINARY: NOT FOR CONSTRUCTION

PROJECT

7200 & 7250 FRANCE

7200 & 7250 FRANCE AVE S, EDINA, MN 55435

ORION INVESTMENTS

6550 YORK AVE S SUITE 207, EDINA, MN 55435

I HEREBY CERTIFY THAT THIS PLAN, SPECIFICATION, OR REPORT WAS PREPARED BY ME OR UNDER MY DIRECT SUPERVISION AND THAT I AM A DULY LICENSED PROFESSIONAL ENGINEER UNDER THE LAWS OF THE STATE OF MINNESOTA.

David J. Knaeble

DATE 1/10/23 LICENSE NO. 48776

ISSUE/SUBMITTAL SUMMARY

DATE	DESCRIPTION
06/30/2022	CITY SUBMITTAL
8/12/2022	PUD SUBMISSION
1/10/23	FINAL PUD SUBMITTAL

DRAWN BY: AM REVIEWED BY: DK

PROJECT NUMBER: 21419

REVISION SUMMARY

DATE	DESCRIPTION

PH. 2 UTILITY PLAN

C4.1

© COPYRIGHT 2022 CIVIL SITE GROUP INC.

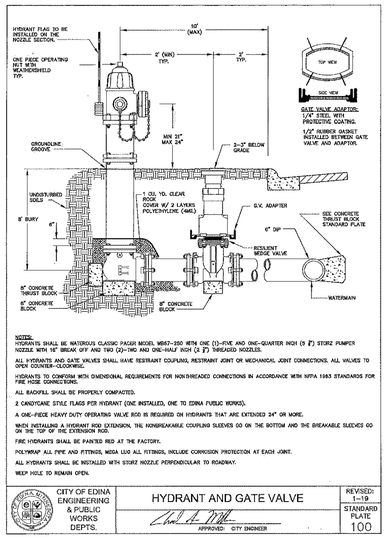

NOTES:
HYDRANTS SHALL BE WATEROUS CLASSIC PAGER MODEL W867-250 WITH ONE (1)-FIVE AND ONE-QUARTER INCH (5 1/4") STORZ PUMPER NOZZLE WITH 18" BREAK OFF AND TWO (2)-TWO AND ONE-HALF INCH (2 1/2") THREADED NOZZLES.

ALL HYDRANTS AND GATE VALVES SHALL HAVE RESTRAINT COUPLING, RESTRAINT JOINT OR MECHANICAL JOINT CONNECTIONS. ALL VALVES TO OPEN COUNTER-CLOCKWISE.

HYDRANTS TO CONFORM WITH DIMENSIONAL REQUIREMENTS FOR NON-THREADED CONNECTIONS IN ACCORDANCE WITH NFPA 1963 STANDARDS FOR FIRE HOSE CONNECTIONS.

ALL BACKFILL SHALL BE PROPERLY COMPACTED.

2 CANDYCANE STYLE FLAGS PER HYDRANT (ONE INSTALLED, ONE TO EDINA PUBLIC WORKS).

A ONE-PIECE HEAVY DUTY OPERATING VALVE ROD IS REQUIRED ON HYDRANTS THAT ARE EXTENDED 24" OR MORE.

WHEN INSTALLING A HYDRANT ROD EXTENSION, THE NONBREAKABLE COUPLING SLEEVES GO ON THE BOTTOM AND THE BREAKABLE SLEEVES GO ON THE TOP OF THE EXTENSION ROD.

FIRE HYDRANTS SHALL BE PAINTED RED AT THE FACTORY.

POLYWRAP ALL PIPE AND FITTINGS, MEGA LUG ALL FITTINGS, INCLUDE CORROSION PROTECTION AT EACH JOINT.

ALL HYDRANTS SHALL BE INSTALLED WITH STORZ NOZZLE PERPENDICULAR TO ROADWAY.

WEEP HOLE TO REMAIN OPEN.

CITY OF EDINA ENGINEERING & PUBLIC WORKS DEPTS.	HYDRANT AND GATE VALVE APPROVED: CITY ENGINEER	REVISED: 1-19 STANDARD PLATE 100

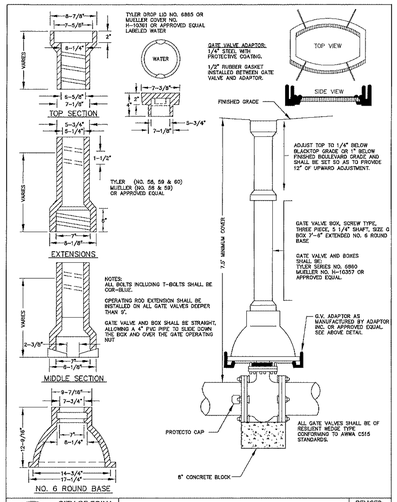

CITY OF EDINA ENGINEERING & PUBLIC WORKS DEPTS.	GATE VALVE AND BOX APPROVED: CITY ENGINEER	REVISED: 04-09 STANDARD PLATE 105

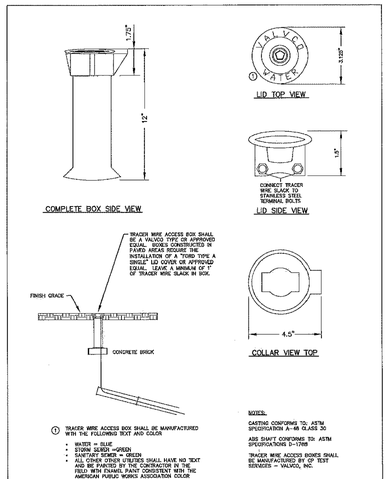

① TRACER WIRE ACCESS BOX SHALL BE MANUFACTURED WITH THE FOLLOWING TEXT AND COLOR

- WATER = BLUE
- STORM SEWER = GREEN
- SANITARY SEWER = GREEN
- ALL OTHER OPEN UTILITIES SHALL HAVE NO TEXT AND BE PAINTED BY THE CONTRACTOR IN THE FIELD WITH ENAMEL PAINT CONSISTENT WITH THE MINNESOTA PUBLIC WORKS ASSOCIATION COLOR CODE.

NOTES:
CASTING CONFORMS TO ASTM SPECIFICATION A-48 CLASS 30

ABS SHAFT CONFORMS TO: ASTM SPECIFICATIONS D-1785

TRACER WIRE ACCESS BOXES SHALL BE MANUFACTURED BY QP TEST SERVICES – VALVCO, INC.

CITY OF EDINA ENGINEERING & PUBLIC WORKS DEPTS.	TRACER WIRE ACCESS BOX APPROVED: CITY ENGINEER	REVISED: 1-19 STANDARD PLATE 110

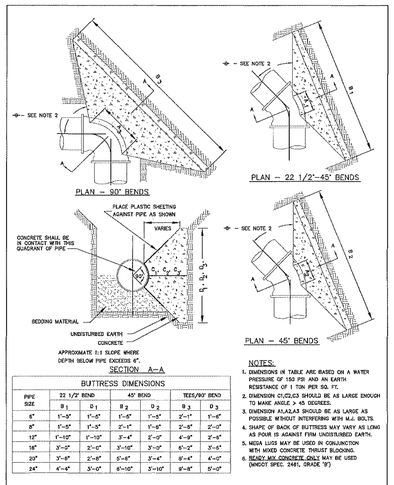

BUTTRESS DIMENSIONS

PIPE SIZE	22 1/2° BEND		45° BEND		TEES/90° BEND	
	B 1	D 1	B 2	D 2	B 3	D 3
6"	1'-5"	1'-6"	1'-8"	1'-5"	2'-1"	1'-8"
8"	1'-5"	1'-5"	2'-1"	1'-8"	2'-8"	2'-0"
12"	1'-10"	2'-10"	3'-4"	2'-0"	4'-8"	3'-6"
16"	2'-0"	2'-10"	3'-10"	3'-0"	6'-2"	3'-6"
20"	3'-6"	2'-6"	5'-6"	3'-4"	8'-4"	4'-0"
24"	4'-4"	3'-0"	6'-10"	3'-10"	9'-8"	5'-0"

NOTES:
1. DIMENSIONS IN TABLE ARE BASED ON A WATER PRESSURE OF 150 PSI AND AN EARTH RESISTANCE OF 1 TON PER SQ. FT.
2. DIMENSION CIRCLED SHOULD BE AS LARGE ENOUGH TO MAKE ANGLE > 45 DEGREES.
3. DIMENSION A,A,A,A,A SHOULD BE AS LARGE AS POSSIBLE WITHOUT INTERFERING WITH ALL BOLTS.
4. SHAPE OF BACK OF BUTTRESS MAY VARY AS LONG AS POUR IS AGAINST FIRM UNDISTURBED EARTH.
5. MEGA LUGS MAY BE USED IN CONJUNCTION WITH MIXED CONCRETE THRUST BLOCKING
6. READY MIX CONCRETE ONLY MAY BE USED (MNDOT SPEC. 2461, GRADE 'B')

CITY OF EDINA ENGINEERING & PUBLIC WORKS DEPTS.	CONCRETE THRUST BLOCK APPROVED: CITY ENGINEER	REVISED: 04-09 STANDARD PLATE 120

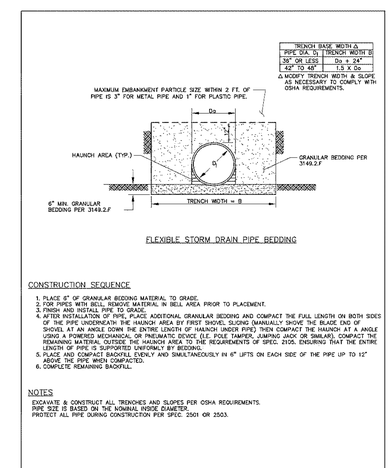

FLEXIBLE STORM DRAIN PIPE BEDDING

CONSTRUCTION SEQUENCE
1. PLACE 6" OF GRANULAR BEDDING MATERIAL TO GRADE.
2. FOR PIPES WITH BELL, REMOVE MATERIAL IN BELL AREA PRIOR TO PLACEMENT.
3. FINISH AND INSTALL PIPE TO GRADE.
4. AFTER INSTALLATION OF PIPE, PLACE ADDITIONAL GRANULAR BEDDING AND COMPACT THE FULL LENGTH ON BOTH SIDES OF THE PIPE UNDERNEATH THE HAUNCH AREA BY FIRST SHOVEL SLICING (MANUALLY SHOVE THE BLADE END OF SHOVEL AT AN ANGLE DOWN THE ENTIRE LENGTH OF HAUNCH UNDER PIPE) THEN COMPACT THE HAUNCH AT A ANGLE USING A POWERED MECHANICAL OR PNEUMATIC DEVICE (I.E. POLE TAMPER, JUMPING JACK OR SIMILAR). COMPACT THE REMAINING MATERIAL OUTSIDE THE HAUNCH AREA TO THE REQUIREMENTS OF SPEC. 2105. ENSURING THAT THE ENTIRE LENGTH OF PIPE IS SUPPORTED UNIFORMLY BY BEDDING.
5. PLACE AND COMPACT BACKFILL EVENLY AND SIMULTANEOUSLY IN 6" LIFTS ON EACH SIDE OF THE PIPE UP TO THE MID-HEIGHT WHEN COMPACTED.
6. COMPLETE REMAINING BACKFILL.

NOTES
EXCAVATE & CONSTRUCT ALL TRENCHES AND SLOPES PER OSHA REQUIREMENTS.
PIPE SIZE IS BASED ON THE NOMINAL INSIDE DIAMETER.
PROTECT ALL PIPE DURING CONSTRUCTION PER SPEC. 2501 OR 2503.

CITY OF EDINA ENGINEERING & PUBLIC WORKS DEPTS.	FLEXIBLE STORM DRAIN PIPE BEDDING DETAIL APPROVED: CITY ENGINEER	REVISED: 03-22 STANDARD PLATE 385

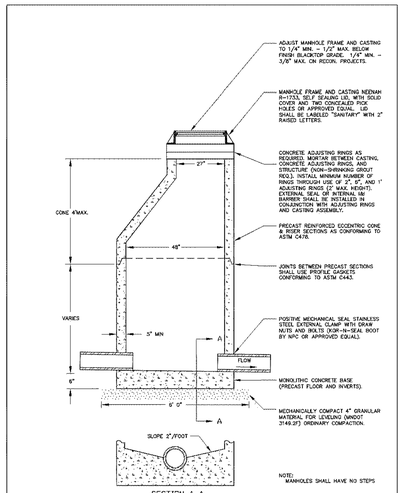

CITY OF EDINA ENGINEERING & PUBLIC WORKS DEPTS.	STANDARD SANITARY SEWER MANHOLE APPROVED: CITY ENGINEER	REVISED: 03-21 STANDARD PLATE 200

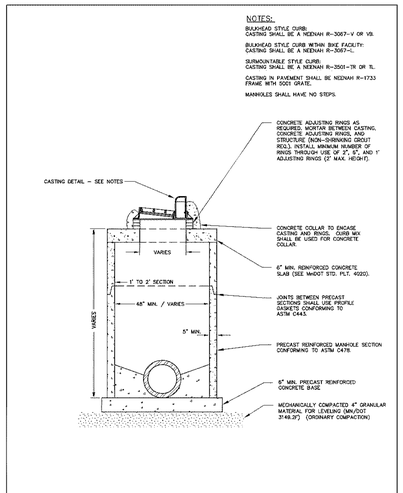

CITY OF EDINA ENGINEERING & PUBLIC WORKS DEPTS.	TYPE "CC" CATCH BASIN MANHOLE APPROVED: CITY ENGINEER	REVISED: 01-22 STANDARD PLATE 230

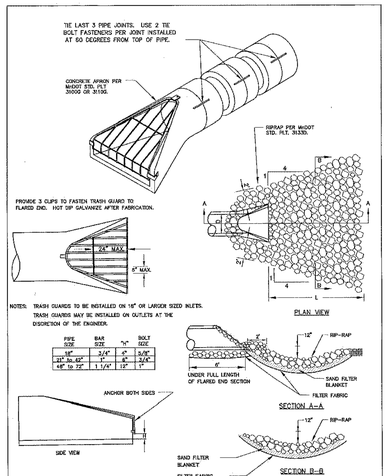

CITY OF EDINA ENGINEERING & PUBLIC WORKS DEPTS.	FLARED END SECTION APPROVED: CITY ENGINEER	REVISED: 1-19 STANDARD PLATE 240

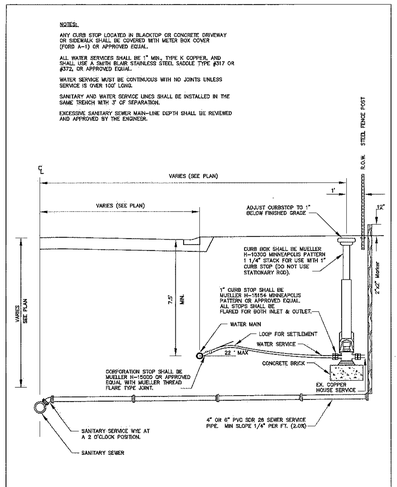

CITY OF EDINA ENGINEERING & PUBLIC WORKS DEPTS.	SEWER AND WATER SERVICE CONNECTION APPROVED: CITY ENGINEER	REVISED: 1-19 STANDARD PLATE 300

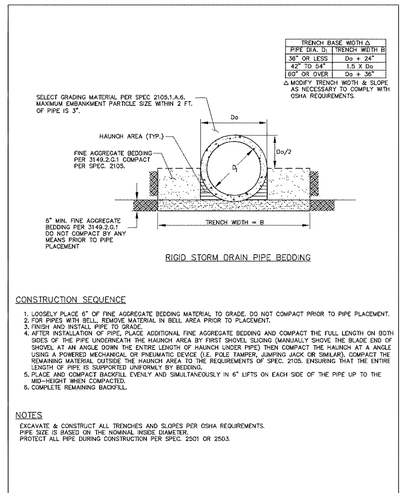

RIGID STORM DRAIN PIPE BEDDING

CONSTRUCTION SEQUENCE
1. LOOSELY PLACE 6" OF FINE AGGREGATE BEDDING MATERIAL TO GRADE. DO NOT COMPACT PRIOR TO PIPE PLACEMENT.
2. FOR PIPES WITH BELL, REMOVE MATERIAL IN BELL AREA PRIOR TO PLACEMENT.
3. FINISH AND INSTALL PIPE TO GRADE.
4. AFTER INSTALLATION OF PIPE, PLACE ADDITIONAL FINE AGGREGATE BEDDING AND COMPACT THE FULL LENGTH ON BOTH SIDES OF THE PIPE UNDERNEATH THE HAUNCH AREA BY FIRST SHOVEL SLICING (MANUALLY SHOVE THE BLADE END OF SHOVEL AT AN ANGLE DOWN THE ENTIRE LENGTH OF HAUNCH UNDER PIPE) THEN COMPACT THE HAUNCH AT A ANGLE USING A POWERED MECHANICAL OR PNEUMATIC DEVICE (I.E. POLE TAMPER, JUMPING JACK OR SIMILAR). COMPACT THE REMAINING MATERIAL OUTSIDE THE HAUNCH AREA TO THE REQUIREMENTS OF SPEC. 2105. ENSURING THAT THE ENTIRE LENGTH OF PIPE IS SUPPORTED UNIFORMLY BY BEDDING.
5. PLACE AND COMPACT BACKFILL EVENLY AND SIMULTANEOUSLY IN 6" LIFTS ON EACH SIDE OF THE PIPE UP TO THE MID-HEIGHT WHEN COMPACTED.
6. COMPLETE REMAINING BACKFILL.

NOTES
EXCAVATE & CONSTRUCT ALL TRENCHES AND SLOPES PER OSHA REQUIREMENTS.
PIPE SIZE IS BASED ON THE NOMINAL INSIDE DIAMETER.
PROTECT ALL PIPE DURING CONSTRUCTION PER SPEC. 2501 OR 2503.

CITY OF EDINA ENGINEERING & PUBLIC WORKS DEPTS.	RIGID STORM DRAIN PIPE BEDDING DETAIL APPROVED: CITY ENGINEER	REVISED: 03-21 STANDARD PLATE 380

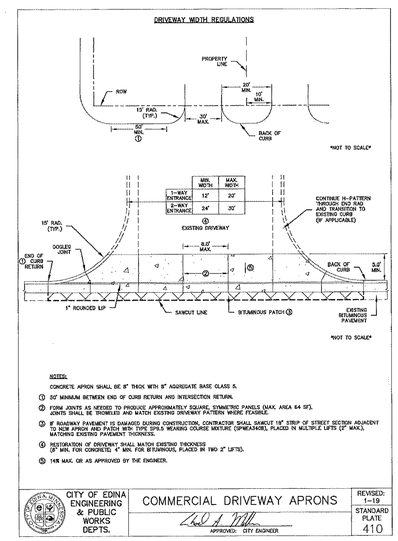

CITY OF EDINA ENGINEERING & PUBLIC WORKS DEPTS.	COMMERCIAL DRIVEWAY APRONS APPROVED: CITY ENGINEER	REVISED: 1-19 STANDARD PLATE 410

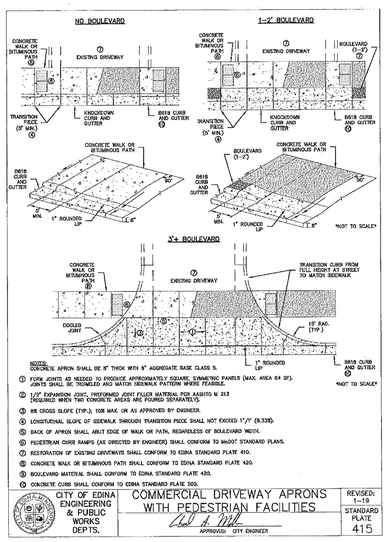

CITY OF EDINA ENGINEERING & PUBLIC WORKS DEPTS.	COMMERCIAL DRIVEWAY APRONS WITH PEDESTRIAN FACILITIES APPROVED: CITY ENGINEER	REVISED: 1-19 STANDARD PLATE 415

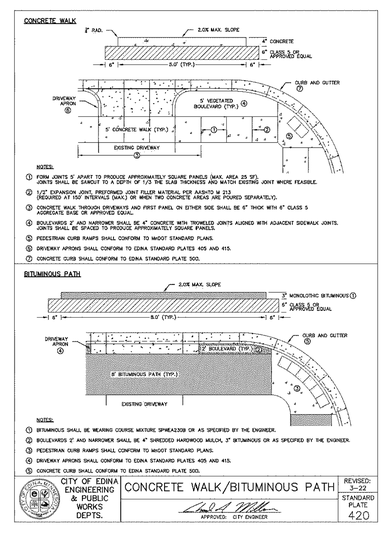

CITY OF EDINA ENGINEERING & PUBLIC WORKS DEPTS.	CONCRETE WALK/BITUMINOUS PATH APPROVED: CITY ENGINEER	REVISED: 3-22 STANDARD PLATE 420

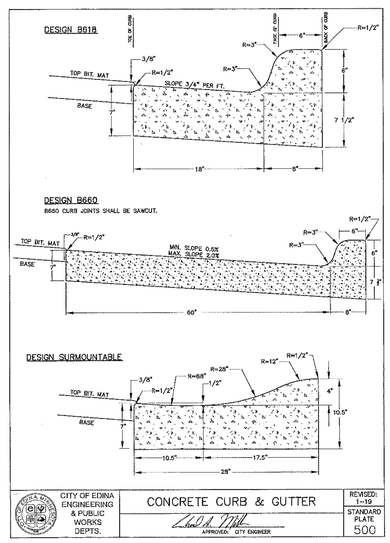

CITY OF EDINA ENGINEERING & PUBLIC WORKS DEPTS.	CONCRETE CURB & GUTTER APPROVED: CITY ENGINEER	REVISED: 1-19 STANDARD PLATE 500

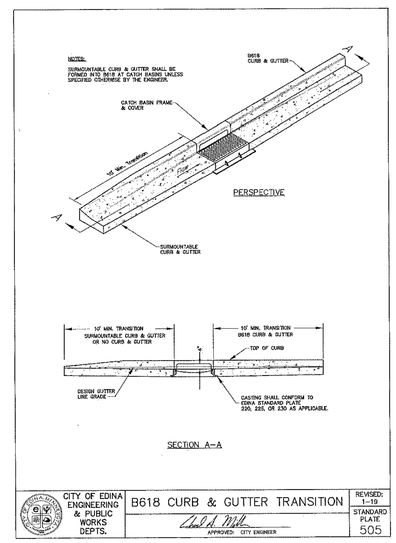

CITY OF EDINA ENGINEERING & PUBLIC WORKS DEPTS.	B618 CURB & GUTTER TRANSITION APPROVED: CITY ENGINEER	REVISED: 1-19 STANDARD PLATE 505

CivilSite GROUP
Civil Engineering • Surveying • Landscape Architecture
5000 Glenwood Avenue
Golden Valley, MN 55422
civilsitegroup.com 612-615-0060

PRELIMINARY: NOT FOR CONSTRUCTION

PROJECT
7200 & 7250 FRANCE
7200 & 7250 FRANCE AVE S, EDINA, MN 55435

ORION INVESTMENTS
6550 YORK AVE S SUITE 207, EDINA, MN 55435

I HEREBY CERTIFY THAT THIS PLAN, SPECIFICATION, OR REPORT WAS PREPARED BY ME OR UNDER MY DIRECT SUPERVISION AND THAT I AM A DULY LICENSED PROFESSIONAL ENGINEER UNDER THE LAWS OF THE STATE OF MINNESOTA.

David J. Knaeble
DATE 1/10/23 LICENSE NO. 48776

ISSUE/SUBMITTAL SUMMARY

DATE	DESCRIPTION
06/30/2022	CITY SUBMITTAL
8/12/2022	PUD SUBMISSION
1/10/23	FINAL PUD SUBMITTAL

DRAWN BY: AM REVIEWED BY: DK
PROJECT NUMBER: 21419

REVISION SUMMARY

DATE	DESCRIPTION

CIVIL DETAILS

C5.0

© COPYRIGHT 2022 CIVIL SITE GROUP INC.

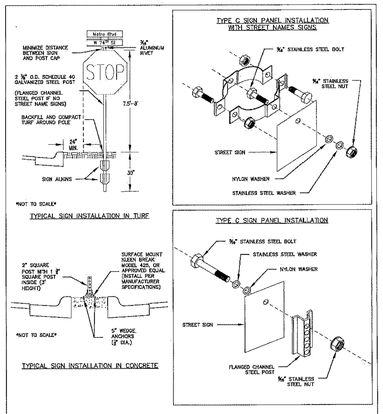

NOTES:
LOCATIONS OF PROPOSED SIGNS SHALL BE MARKED IN THE FIELD BY THE ENGINEER PRIOR TO INSTALLATION.
SIGN MATERIALS SHALL CONFORM TO STANDARDS SET FORTH IN GRADING AND LANDSCAPING SPECIFICATIONS.
SIGNS SHALL CONFORM TO MMUTCD UNLESS AMENDED BY THE ENGINEER.
WHEN INSTALLING TYPE C SIGNS, CONTRACTOR MUST USE VC 241 DOUBLE-SIDED SIGN BRACKET FROM TAPCO, OR APPROVED EQUAL.

CITY OF EDINA ENGINEERING & PUBLIC WORKS DEPTS. | ROADWAY SIGNAGE | APPROVED: CITY ENGINEER | REVISED: 1-19 | STANDARD PLATE 700

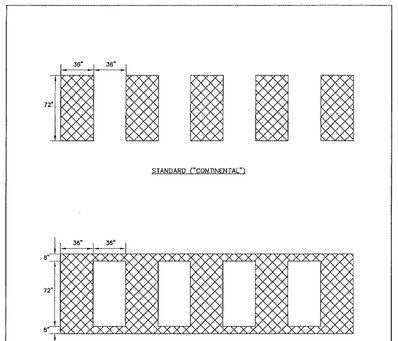

NOTES:
① ALL CROSSWALKS SHALL BE SOLID WHITE, GROUND-IN PREFORMED THERMOPLASTIC (125 MIL) HOT APPLIED WITH EPOXY BY ENNIS PAINT, OR APPROVED EQUAL.
② "LADDER" STYLE CROSSWALK MARKINGS SHALL ONLY BE USED FOR CROSSINGS THAT ABUT SCHOOL PROPERTIES, OR AS DIRECTED BY ENGINEER.

CITY OF EDINA ENGINEERING & PUBLIC WORKS DEPTS. | CROSSWALK PAVEMENT MARKINGS | APPROVED: CITY ENGINEER | REVISED: 1-17 | STANDARD PLATE 716

PLAN SYMBOL	COLOR	MnMUTCD CODE	SIZE (IN.)	PLAN LEGEND
ROSLAND PARK 2	WHITE ON GREEN	D1-1b D1-1d	CUSTOM	BICYCLE DESTINATION SIGN
ROSLAND PARK 2 WOODDALE AVE 1½	WHITE ON GREEN	D1-2b D1-2c	CUSTOM	BICYCLE DESTINATION SIGN
ROSLAND PARK 2 WOODDALE AVE 1½ W. 54TH ST 2½	WHITE ON GREEN	D1-3b D1-3c	CUSTOM	BICYCLE DESTINATION SIGN
BIKE LANE	BLACK ON WHITE	R3-17	24 x 18	BIKE LANE
AHEAD	BLACK ON WHITE	R3-17uP	24 x 8	AHEAD
END	BLACK ON WHITE	R3-17bP	24 x 8	END
BEGIN RIGHT TURN LANE YIELD TO BIKES	BLACK ON WHITE	R4-4	36 x 30	BEGIN RIGHT TURN YIELD TO BIKES
MAY USE FULL LANE	BLACK ON WHITE	R4-11	30 x 30	BICYCLE MAY USE FULL LANE
	BLACK ON YELLOW GREEN	W11-1	30 x 30	BICYCLE
SHARE THE ROAD	BLACK ON YELLOW GREEN	W15-1P	18 x 24	SHARE THE ROAD

CITY OF EDINA ENGINEERING & PUBLIC WORKS DEPTS. | BIKEWAY SIGNAGE | APPROVED: CITY ENGINEER | REVISED: 1-17 | STANDARD PLATE 730

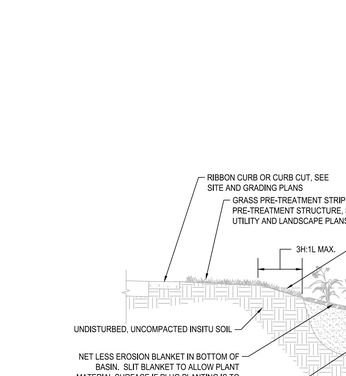

NOTE:
1. SIGN SHALL BE AS SPECIFIED.
2. VERIFY POST PAINT COLOR WITH LANDSCAPE ARCHITECT PRIOR TO INSTALLATION.

2 ACCESSIBLE SIGN AND POST
N T S

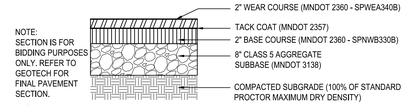

NOTE:
SECTION IS FOR BIDDING PURPOSES ONLY. REFER TO GEOTECH FOR FINAL PAVEMENT SECTION.

4 HEAVY DUTY BITUMINOUS PAVEMENT
N T S

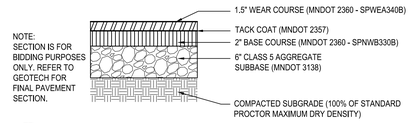

NOTE:
SECTION IS FOR BIDDING PURPOSES ONLY. REFER TO GEOTECH FOR FINAL PAVEMENT SECTION.

5 LIGHT DUTY BITUMINOUS PAVEMENT
N T S

CASTING SCHEDULE		
CATCH BASIN/MANHOLE/RISER	GRATE TYPE (NEENAH)	REMARKS
2, 22, 31-39	R-3067-C (V GRATE)	STORM CURB INLET
3, 4, 31	R-2501	STORM AREA DRAIN INLET
23, 24, 41, 42	R-1642	STORM MANHOLE

NOTE:
1. CASTINGS SHALL BE NEENAH FOUNDRY CASTINGS OR APPROVED EQUIVALENT.
2. CASTINGS SHALL BE STAMPED WITH APPROPRIATE UTILITY NAME ("STORM SEWER", "SANITARY SEWER")

3 CASTING SCHEDULE
N T S

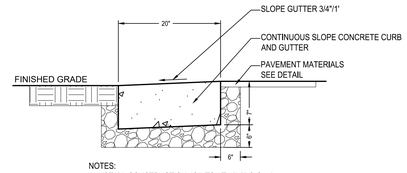

NOTES:
1. INSTALL CONSTRUCTION JOINTS AT 10'-0" O.C. +/-
2. BASE DEPTH DEPENDANT UPON SOIL CONDITIONS

6 RIBBON CURB
N T S

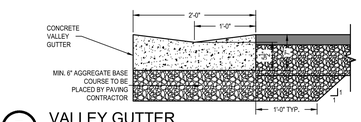

7 VALLEY GUTTER
N T S

PLAN SYMBOL	COLOR	MnMUTCD CODE	SIZE (IN.)	PLAN LEGEND	PLAN SYMBOL	COLOR	MnMUTCD CODE	SIZE (IN.)	PLAN LEGEND
STOP	WHITE ON RED	R1-1	30 x 30 (36 x 36 IN COUNTY ROW)	STOP	DO NOT ENTER	RED ON WHITE	R5-1	30 x 30	DO NOT ENTER
YIELD	WHITE ON RED	R1-2	30 x 30	YIELD	WRONG WAY	WHITE ON RED	R5-1a	36 x 24	WRONG WAY
ALL WAY	WHITE ON RED	R1-3P	18 x 6	ALL WAY	ONE WAY	BLACK ON WHITE	R6-1R R6-1L	36 x 12	ONE WAY
SPEED LIMIT	BLACK ON WHITE	R2-1	24 x 30	SPEED LIMIT	ONE WAY	BLACK ON WHITE	R6-2R R6-2L	15 x 24	ONE WAY
LEFT LANE MUST TURN LEFT	BLACK ON WHITE	R3-7L R3-7R	30 x 30	LEFT LANE MUST TURN LEFT		BLACK AND RED ON WHITE	R7-2	12 x 18	NO PARKING (NO PROVIDED BY CITY)
CENTER LANE ONLY	BLACK ON WHITE	R3-9b	24 x 36	CENTER LANE ARROW		BLACK AND RED ON WHITE	R8-3	18 x 18	NO PARKING
ONLY	BLACK ON WHITE	R3-30AE	30 x 30	LANE CONTROL		BLACK AND RED ON WHITE	R9-3	18 x 18	NO PED CROSSING
ONLY ONLY ONLY	BLACK ON WHITE	R3-30ACA	48 x 30	LANE CONTROL		BLACK ON YELLOW GREEN	S1-1	30 x 30	SCHOOL ZONE
	BLACK ON WHITE	R4-7	24 x 30	KEEP RIGHT	WHEN CHILDREN ARE PRESENT	BLACK ON WHITE	S4-3P	24 x 10	CHILDREN PRESENT
KEEP RIGHT	BLACK ON WHITE	R4-7a	24 x 30	KEEP RIGHT	SCHOOL	BLACK ON YELLOW GREEN	S4-3P	24 x 8	SCHOOL

CITY OF EDINA ENGINEERING & PUBLIC WORKS DEPTS. | ROADWAY SIGNAGE | APPROVED: CITY ENGINEER | REVISED: 1-19 | STANDARD PLATE 705

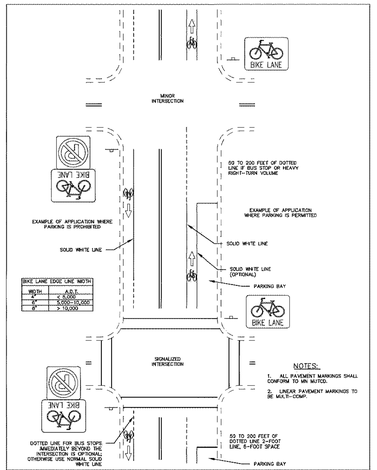

NOTES:
1. ALL PAVEMENT MARKINGS SHALL CONFORM TO MN MUTCD.
2. LINEAR PAVEMENT MARKINGS TO BE MULTI-COMP.

CITY OF EDINA ENGINEERING & PUBLIC WORKS DEPTS. | PAVEMENT MARKINGS FOR BICYCLE LANES ON A TWO-WAY STREET | APPROVED: CITY ENGINEER | REVISED: 3-22 | STANDARD PLATE 721

12" & 15" Drain Basins

Part#/Prefix	Product Description	Available Outlets
2812AG__X	12" Custom Basin	4" thru 12"
2815AG__X	15" Custom Basin	4" thru 15"

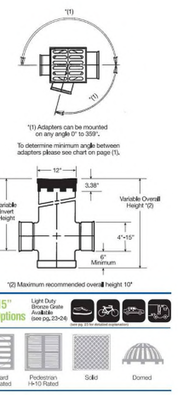

10

PLAN SYMBOL	COLOR	MnMUTCD CODE	SIZE (IN.)	PLAN LEGEND	PLAN SYMBOL	COLOR	MnMUTCD CODE	SIZE (IN.)	PLAN LEGEND
	BLACK ON YELLOW	W1-7L W1-7L	30 x 30	HORIZONTAL ALIGNMENT		BLACK ON YELLOW	W8-1	30 x 30	SHARED HIGHWAY
	BLACK ON YELLOW	W1-2R W1-2L	30 x 30	HORIZONTAL ALIGNMENT		BLACK ON YELLOW	W8-2	30 x 30	SHARED HIGHWAY CROSS
	BLACK ON YELLOW	W1-3R W1-3L	30 x 30	HORIZONTAL ALIGNMENT		BLACK ON YELLOW	W7-1 W7-1a	30 x 30	HILL
	BLACK ON YELLOW	W1-4L W1-4R	30 x 30	HORIZONTAL ALIGNMENT		BLACK ON YELLOW	W10-1	30 DIA	GRADE CROSSING
	BLACK ON YELLOW	W1-5R W1-5L	30 x 30	HORIZONTAL ALIGNMENT		BLACK ON YELLOW GREEN	W11-2	30 x 30	PED CROSSING
	BLACK ON YELLOW	W1-6R W1-6L	48 x 24	DIRECTIONAL ARROW		BLACK ON YELLOW GREEN	W11-15	30 x 30	BICYCLE/ PED CROSSING
	BLACK ON YELLOW	W1-7	48 x 24	DIRECTIONAL ARROW	NO OUTLET	BLACK ON YELLOW	W14-2	30 x 30	NO OUTLET
	BLACK ON YELLOW	W1-8	18 x 24	CHEVRON		BLACK ON YELLOW GREEN	W16-7PL W16-7PR	24 x 12	DIRECTIONAL ARROW
STOP AHEAD	BLACK ON YELLOW	W3-1	30 x 30	STOP AHEAD		RED ON BLACK	X4-11	18 x 18	OBJECT MARKER

CITY OF EDINA ENGINEERING & PUBLIC WORKS DEPTS. | ROADWAY SIGNAGE | APPROVED: CITY ENGINEER | REVISED: 1-19 | STANDARD PLATE 710

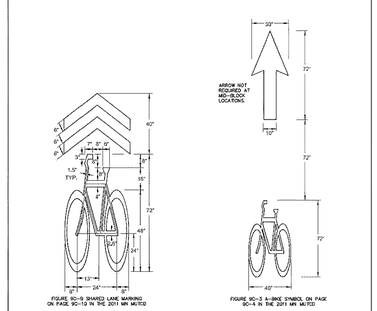

NOTES:
① PAVEMENT MARKINGS SHALL BE POSITIONED PER EDINA STANDARD PLATES 720, 721, AND 722.
② ALL BIKE LANE PAVEMENT MARKINGS SHALL BE SOLID WHITE, GROUND-IN PREFORMED THERMOPLASTIC (125 MIL.) HOT APPLIED WITH EPOXY BY THE FOLLOWING SUPPLIERS:
-PREMARK BY ENNIS PAINT
-OPTIMARK BY DEVEDCO MARKINGS, INC.
-APPROVED EQUAL
③ ALL PAVEMENT MARKINGS SHALL CONFORM TO MnMUTCD.

CITY OF EDINA ENGINEERING & PUBLIC WORKS DEPTS. | BIKE LANE PAVEMENT MARKING DIMENSIONS | APPROVED: CITY ENGINEER | REVISED: 3-22 | STANDARD PLATE 725

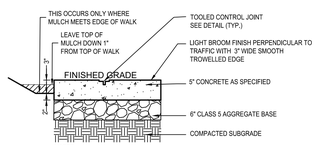

NOTES:
1. INSTALLATION SHALL BE CERTIFIED AND IN ACCORDANCE TO AN ON-SITE A.C.I. TECHNICIAN AS SPECIFIED.
2. SEE GEO-TECHNICAL RECOMMENDATIONS FOR GROSS WEIGHT REQUIREMENTS.
3. SEE LAYOUT DRAWINGS FOR LIMITS OF WALKS.
4. SEE CONCRETE JOINT DETAIL FOR REQUIREMENTS.
5. 1/2" WIDE EXPANSION JOINT AND SEALANT AT ALL CURBS.

1 CONCRETE WALK/PAD
N T S (PRIVATE PROPERTY)

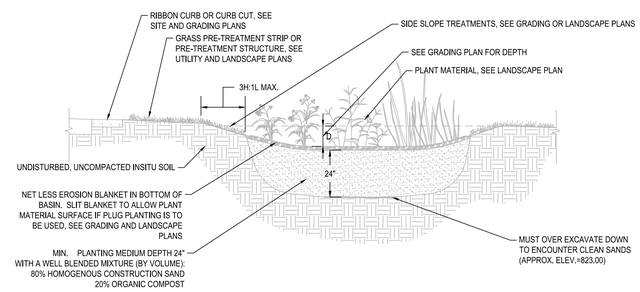

TYPICAL SECTION VIEW

CONSTRUCTION SEQUENCING

1. INSTALL SILT FENCE AND/OR OR OTHER APPROPRIATE TEMPORARY EROSION CONTROL DEVICES TO PREVENT SEDIMENT FROM LEAVING OR ENTERING THE PRACTICE DURING CONSTRUCTION.
2. ALL DOWN-GRADIENT PERIMETER SEDIMENT CONTROL BMP'S MUST BE IN PLACE BEFORE ANY UP GRADIENT LAND DISTURBING ACTIVITY BEGINS.
3. PERFORM CONTINUOUS INSPECTIONS OF EROSION CONTROL PRACTICES.
4. INSTALL UTILITIES (WATER, SANITARY SEWER, ELECTRIC, PHONE, FIBER OPTIC, ETC) PRIOR TO SETTING FINAL GRADE OF BIORETENTION DEVICE.
5. ROUGH GRADE THE SITE. IF BIORETENTION AREAS ARE BEING USED AS TEMPORARY SEDIMENT BASINS LEAVE A MINIMUM OF 3 FEET OF COVER OVER THE PRACTICE TO PROTECT THE UNDERLYING SOILS FROM CLOGGING.
6. PERFORM ALL OTHER SITE IMPROVEMENTS.
7. PLANT ALL AREAS AFTER DISTURBANCE.
8. CONSTRUCT BIORETENTION DEVICE UPON STABILIZATION OF CONTRIBUTING DRAINAGE AREA.
9. IMPLEMENT TEMPORARY AND PERMANENT EROSION CONTROL PRACTICES.
10. PLANT AND/OR ROCK MULCH BIORETENTION DEVICE.
11. REMOVE TEMPORARY EROSION CONTROL DEVICES AFTER THE CONTRIBUTING DRAINAGE AREA IS ADEQUATELY VEGETATED.

GENERAL NOTES

1. IN THE EVENT THAT SEDIMENT IS INTRODUCED INTO THE BMP DURING OR IMMEDIATELY FOLLOWING EXCAVATION, THIS MATERIAL SHALL BE REMOVED FROM THE PRACTICE PRIOR TO CONTINUING CONSTRUCTION.
2. GRADING OF BIORETENTION DEVICES SHALL BE ACCOMPLISHED USING LOW-COMPACTION EARTH-MOVING EQUIPMENT TO PREVENT COMPACTION OF UNDERLYING SOILS.
3. ALL SUB MATERIALS BELOW THE SPECIFIED BIORETENTION DEPTH (ELEVATION) SHALL BE UNDISTURBED, UNLESS OTHERWISE NOTED.

8 BIO-INFILTRATION BASIN (RAIN GARDEN - TYP.)
N T S

CivilSite GROUP
Civil Engineering • Surveying • Landscape Architecture
5000 Glenwood Avenue
Golden Valley, MN 55422
civilsitegroup.com 612-615-0060

PRELIMINARY: NOT FOR CONSTRUCTION

PROJECT
7200 & 7250 FRANCE
7200 & 7250 FRANCE AVE S, EDINA, MN 55435

ORION INVESTMENTS
6550 YORK AVE S SUITE 207, EDINA, MN 55435

I HEREBY CERTIFY THAT THIS PLAN, SPECIFICATION, OR REPORT WAS PREPARED BY ME OR UNDER MY DIRECT SUPERVISION AND THAT I AM A DULY LICENSED PROFESSIONAL ENGINEER UNDER THE LAWS OF THE STATE OF MINNESOTA.

David J. Knaeble
DATE 1/10/23 LICENSE NO. 48776

ISSUE/SUBMITTAL SUMMARY

DATE	DESCRIPTION
06/30/2022	CITY SUBMITTAL
8/12/2022	PUD SUBMISSION
1/10/23	FINAL PUD SUBMITTAL

DRAWN BY: AM REVIEWED BY: DK
PROJECT NUMBER: 21419

REVISION SUMMARY

DATE	DESCRIPTION

CIVIL DETAILS

C5.1

© COPYRIGHT 2022 CIVIL SITE GROUP INC.

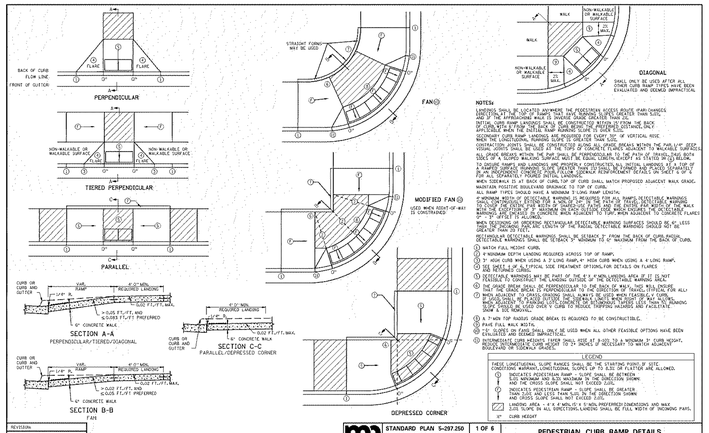

NOTES:

1. SIDEWALKS SHALL BE LOCATED ADJACENT THE PEDESTRIAN ACCESS ROUTE (PAR) CHANGES DIRECTION IN THE CASE OF PARKS, THEY ARE PERMITTED TO BE LOCATED WITHIN THE PARK. SIDEWALKS SHALL BE CONSTRUCTED WITHIN THE PAR.
2. INITIAL CURB RAMP LANDINGS SHALL BE CONSTRUCTED WITHIN ITS FORM THE BACK OF CURB, WITH A MINIMUM 1.5' WIDTH BETWEEN THE PROPOSED CUTTING, DACT OR EXPANSION JOINT AND THE FACE OF CURB. (SEE DETAIL 1)
3. SECONDARY CURB RAMP LANDINGS ARE REQUIRED FOR EVERY 30' OF VERTICAL RISE WHEN THE LONGITUDINAL SLOPE EXCEEDS 5%.
4. CONSTRUCTION JOINTS SHALL BE CONSTRUCTED ALONG ALL GRADE BREAKS WITHIN THE PAR, 1/4" DEEP TOOLED JOINTS SHALL BE USED ALONG THE TOP OF STRAIGHT FLARES ADJACENT TO WALKABLE SURFACES.
5. ALL GRADE BREAKS WITHIN THE PAR SHALL BE PERPENDICULAR TO THE PATH OF TRAVEL. THIS MAY REQUIRE A SLIGHT ADJUSTMENT TO THE ALIGNMENT OF THE RAMP TO ACHIEVE THIS.
6. TO ENSURE RAMPS AND LANDINGS ARE PROPERLY CONSTRUCTED, ALL INITIAL LANDINGS AT TOP OF A RAMPED SURFACE REQUIRED TO BE GREATER THAN 10' WIDE SHALL BE FORMED AND FINISHED SEPARATELY FOR ALL SEPARATELY FORMED INITIAL LANDINGS.
7. WHEN SIDEWALK IS AT BACK OF CURB, TOP OF CURB SHALL MATCH PROPOSED ADJACENT WALK GRADE. WHEN SIDEWALK IS AT CURB, SIDEWALK SHALL MATCH CURB.
8. ALL RAMP TYPES SHOULD HAVE A MINIMUM 5' LONG RAMP LENGTH.
9. A MINIMUM WIDTH OF DETECTABLE WARNING IS REQUIRED FOR ALL RAMPS DETECTABLE WARNINGS SHALL EXTEND THE FULL WIDTH OF THE RAMP, EXCEPT FOR A MINIMUM OF 2' SHORTER THAN THE FULL WIDTH TO ALLOW FOR FLARES FOR RAMPS IN CONDITIONS FACING AND THE ENTIRE 24" WIDTH OF THE WALK WHEN THE RAMP IS PERPENDICULAR TO THE STREET. DETECTABLE WARNINGS SHALL BE PLACED WITHIN 6" OF THE GUTTER PAN. WHEN THE RAMP IS PARALLEL TO THE STREET, DETECTABLE WARNINGS SHALL BE PLACED WITHIN 6" OF THE BACK OF CURB. (SEE DETAILS ON SHEET 5 OF 6)
10. WHEN SIDEWALK IS AT BACK OF CURB, TOP OF CURB SHALL MATCH PROPOSED ADJACENT WALK GRADE. WHEN SIDEWALK IS AT CURB, SIDEWALK SHALL MATCH CURB.
11. ALL RAMP TYPES SHOULD HAVE A MINIMUM 5' LONG RAMP LENGTH.
12. A MINIMUM WIDTH OF DETECTABLE WARNING IS REQUIRED FOR ALL RAMPS DETECTABLE WARNINGS SHALL EXTEND THE FULL WIDTH OF THE RAMP, EXCEPT FOR A MINIMUM OF 2' SHORTER THAN THE FULL WIDTH TO ALLOW FOR FLARES FOR RAMPS IN CONDITIONS FACING AND THE ENTIRE 24" WIDTH OF THE WALK WHEN THE RAMP IS PERPENDICULAR TO THE STREET. DETECTABLE WARNINGS SHALL BE PLACED WITHIN 6" OF THE GUTTER PAN. WHEN THE RAMP IS PARALLEL TO THE STREET, DETECTABLE WARNINGS SHALL BE PLACED WITHIN 6" OF THE BACK OF CURB. (SEE DETAILS ON SHEET 5 OF 6)
13. A 3' WIDE TOP RADIUS GRADE BREAK IS REQUIRED TO BE CONSTRUCTIBLE.
14. FAVE FULL WALK WIDTH.
15. FULL SLOPES AND CROSS SLOPES ONLY BE USED WHEN ALL OTHER FEASIBLE OPTIONS HAVE BEEN EXHAUSTED AND ARE NOT FEASIBLE.
16. INTERMEDIATE LANDINGS BETWEEN RAMPS SHALL BE AT 2.5% TO A MAXIMUM 3% SLOPE IN ANY DIRECTION. LANDINGS SHALL BE PLACED WITHIN 1.5' OF THE BACK OF CURB WITH A MINIMUM 1.5' WIDTH TO ALLOW FOR ADJACENT BOULEVARD OR SIDEWALK GRADES.

LEGEND

THESE LONGITUDINAL SLOPE RANGES SHALL BE THE STARTING POINT OF SITE CONDITIONS WARRANT,LONGITUDINAL SLOPES UP TO 8.3% OR FLATTER ARE ALLOWED.

- INDICATES PEDESTRIAN RAMP - SLOPE SHALL BE BETWEEN 5.0% MINIMUM AND 8.3% MAXIMUM IN THE DIRECTION SHOWN
- INDICATES PEDESTRIAN RAMP - SLOPE SHALL BE GREATER THAN 8.3% AND LESS THAN 10% IN THE DIRECTION SHOWN (USE ONLY WHEN ALL OTHER OPTIONS FAIL)
- LANDING AREA - 0 TO 2.0% MAX. PERPENDICULAR SLOPE IN ALL DIRECTIONS.LANDING SHALL BE FULL WIDTH OF INCOMING PARK.
- CURB HEIGHT

MINNESOTA DEPARTMENT OF TRANSPORTATION

STANDARD PLAN S-297.250 | 1 OF 6 | APPROVED: 11-04-2021 | REVISED:

PEDESTRIAN CURB RAMP DETAILS

STATE PROJ. NO. (TH) SHEET NO. OF SHEETS

REVISION: APPROVED: 11-04-2021

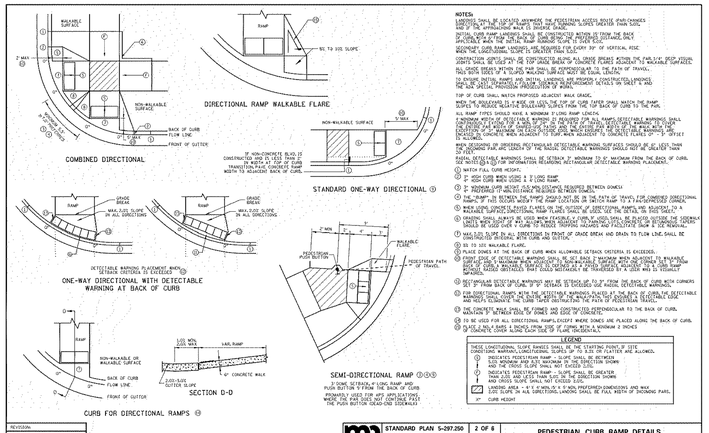

NOTES:

1. SIDEWALKS SHALL BE LOCATED ADJACENT THE PEDESTRIAN ACCESS ROUTE (PAR) CHANGES DIRECTION IN THE CASE OF PARKS, THEY ARE PERMITTED TO BE LOCATED WITHIN THE PARK. SIDEWALKS SHALL BE CONSTRUCTED WITHIN THE PAR.
2. INITIAL CURB RAMP LANDINGS SHALL BE CONSTRUCTED WITHIN ITS FORM THE BACK OF CURB, WITH A MINIMUM 1.5' WIDTH BETWEEN THE PROPOSED CUTTING, DACT OR EXPANSION JOINT AND THE FACE OF CURB. (SEE DETAIL 1)
3. SECONDARY CURB RAMP LANDINGS ARE REQUIRED FOR EVERY 30' OF VERTICAL RISE WHEN THE LONGITUDINAL SLOPE EXCEEDS 5%.
4. CONSTRUCTION JOINTS SHALL BE CONSTRUCTED ALONG ALL GRADE BREAKS WITHIN THE PAR,1/4" DEEP TOOLED JOINTS SHALL BE USED ALONG THE TOP OF STRAIGHT FLARES ADJACENT TO WALKABLE SURFACES.
5. ALL GRADE BREAKS WITHIN THE PAR SHALL BE PERPENDICULAR TO THE PATH OF TRAVEL. THIS MAY REQUIRE A SLIGHT ADJUSTMENT TO THE ALIGNMENT OF THE RAMP TO ACHIEVE THIS.
6. TO ENSURE RAMPS AND LANDINGS ARE PROPERLY CONSTRUCTED, ALL INITIAL LANDINGS AT TOP OF A RAMPED SURFACE REQUIRED TO BE GREATER THAN 10' WIDE SHALL BE FORMED AND FINISHED SEPARATELY FOR ALL SEPARATELY FORMED INITIAL LANDINGS.
7. TOP OF CURB SHALL MATCH PROPOSED ADJACENT WALK GRADE.
8. WHEN THE SIDEWALKS IS AT BACK OF CURB, THE TOP OF CURB TAPER SHALL MATCH THE RAMP SLOPE TO REDUCE NEGATIVE BULLDAMPS SLOPES FROM THE TOP BACK OF CURB TO THE PAR.
9. ALL RAMP TYPES SHOULD HAVE A MINIMUM 5' LONG RAMP LENGTH.
10. A MINIMUM WIDTH OF DETECTABLE WARNING IS REQUIRED FOR ALL RAMPS DETECTABLE WARNINGS SHALL EXTEND THE FULL WIDTH OF THE RAMP, EXCEPT FOR A MINIMUM OF 2' SHORTER THAN THE FULL WIDTH TO ALLOW FOR FLARES FOR RAMPS IN CONDITIONS FACING AND THE ENTIRE 24" WIDTH OF THE WALK WHEN THE RAMP IS PERPENDICULAR TO THE STREET. DETECTABLE WARNINGS SHALL BE PLACED WITHIN 6" OF THE GUTTER PAN. WHEN THE RAMP IS PARALLEL TO THE STREET, DETECTABLE WARNINGS SHALL BE PLACED WITHIN 6" OF THE BACK OF CURB. (SEE DETAILS ON SHEET 5 OF 6)
11. WHEN SIDEWALK IS AT BACK OF CURB, TOP OF CURB SHALL MATCH PROPOSED ADJACENT WALK GRADE. WHEN SIDEWALK IS AT CURB, SIDEWALK SHALL MATCH CURB.
12. ALL RAMP TYPES SHOULD HAVE A MINIMUM 5' LONG RAMP LENGTH.
13. A 3' WIDE TOP RADIUS GRADE BREAK IS REQUIRED TO BE CONSTRUCTIBLE.
14. FAVE FULL WALK WIDTH.
15. FULL SLOPES AND CROSS SLOPES ONLY BE USED WHEN ALL OTHER FEASIBLE OPTIONS HAVE BEEN EXHAUSTED AND ARE NOT FEASIBLE.
16. INTERMEDIATE LANDINGS BETWEEN RAMPS SHALL BE AT 2.5% TO A MAXIMUM 3% SLOPE IN ANY DIRECTION. LANDINGS SHALL BE PLACED WITHIN 1.5' OF THE BACK OF CURB WITH A MINIMUM 1.5' WIDTH TO ALLOW FOR ADJACENT BOULEVARD OR SIDEWALK GRADES.

LEGEND

THESE LONGITUDINAL SLOPE RANGES SHALL BE THE STARTING POINT OF SITE CONDITIONS WARRANT,LONGITUDINAL SLOPES UP TO 8.3% OR FLATTER ARE ALLOWED.

- INDICATES PEDESTRIAN RAMP - SLOPE SHALL BE BETWEEN 5.0% MINIMUM AND 8.3% MAXIMUM IN THE DIRECTION SHOWN
- INDICATES PEDESTRIAN RAMP - SLOPE SHALL BE GREATER THAN 8.3% AND LESS THAN 10% IN THE DIRECTION SHOWN (USE ONLY WHEN ALL OTHER OPTIONS FAIL)
- LANDING AREA - 0 TO 2.0% MAX. PERPENDICULAR SLOPE IN ALL DIRECTIONS.LANDING SHALL BE FULL WIDTH OF INCOMING PARK.
- CURB HEIGHT

MINNESOTA DEPARTMENT OF TRANSPORTATION

STANDARD PLAN S-297.250 | 2 OF 6 | APPROVED: 11-04-2021 | REVISED:

PEDESTRIAN CURB RAMP DETAILS

STATE PROJ. NO. (TJH) SHEET NO. OF SHEETS

REVISION: APPROVED: 11-04-2021

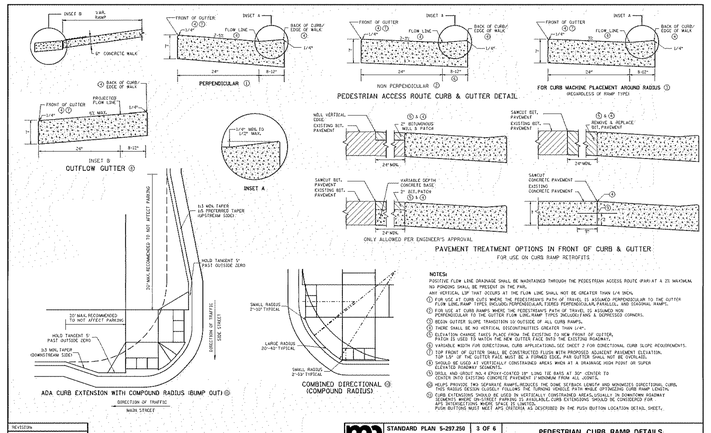

NOTES:

1. POSITIVE FLOW LINE DRAINAGE SHALL BE MAINTAINED THROUGH THE PEDESTRIAN ACCESS ROUTE (PAR)AT A 2% MAXIMUM. MAXIMUM CROSS SLOPE PRESENT.
2. VERTICAL LIP THAT EXCEEDS 1/4" AT THE FLOW LINE SHALL NOT BE GREATER THAN 1/4 INCH.
3. FOR USE ON CURB RAMPS WHERE THE PEDESTRIANS PATH OF TRAVEL IS ASSUMED PERPENDICULAR TO THE GUTTER FLOW LINE,RAMP TYPES INCLUDE:PERPENDICULAR,TIERED PERPENDICULAR,PARALLEL, AND DIAGONAL RAMPS.
4. FOR USE AT RAMP POINTS WHERE THE PEDESTRIANS PATH OF TRAVEL IS ASSUMED NON PERPENDICULAR TO THE GUTTER FLOW LINE,RAMP TYPES INCLUDE:FANS & DEPRESSED CORNERS.
5. BEGIN GUTTER SLOPE TRANSITION 10 OUTSIDE OF ALL CURB RAMPS.
6. ALL CURB RAMPS SHALL MATCH BOTTOM OF ADJACENT WALK.
7. ELEVATION CHANGE MUST BE ACCOMPLISHED WITHIN THE EXISTING OR NEW FRONT OF GUTTER. PATCH IS USED TO MATCH THE NEW GUTTER FACE INTO THE EXISTING ROADWAY.
8. VARIABLE WIDTH FOR DIRECTIONAL CURB RAMP APPLICATIONS.SEE SHEET 2 FOR DIRECTIONAL CURB SLOPE REQUIREMENTS.
9. TOP FRONT OF GUTTER SHALL BE CONSTRUCTED FLUSH WITH PROPOSED ADJACENT PAVEMENT ELEVATION.
10. ALL CURB RAMP TYPES SHALL MEET THE 8 FORMED SIDES PER SUTTER SHALL NOT BE OVERLAID.
11. SHOULD BE USED IN VERTICALLY CONSTRAINED AREAS WHEN AT A DRAINAGE HIGH POINT OR SUPER ELEVATED ROADWAY SEGMENTS.
12. WELL AND GRIDS MUST BE A STEEL-COATED OR LONG TOE BARS.AT 30° COVERED TO CENTER INTO EXISTING CONCRETE PAVEMENT FOUNDATION FOR ALL LOCATIONS.
13. CURB EXTENSIONS SHOULD BE USED IN VERTICALLY CONSTRAINED AREAS,USUALLY IN DOWNTOWN ROADWAY APPLICATIONS.CURB EXTENSIONS SHOULD BE CONSIDERED FOR ADA PEDESTRIAN ROUTE TRAVELING DIAGONALLY ACROSS INTERSECTIONS.
14. PUSH BUTTONS MUST MEET APS CRITERIA AS DESCRIBED IN THE PUSH BUTTON LOCATION DETAIL SHEET.

MINNESOTA DEPARTMENT OF TRANSPORTATION

STANDARD PLAN S-297.250 | 3 OF 6 | APPROVED: 11-04-2021 | REVISED:

PEDESTRIAN CURB RAMP DETAILS

STATE PROJ. NO. (TH) SHEET NO. OF SHEETS

REVISION: APPROVED: 11-04-2021

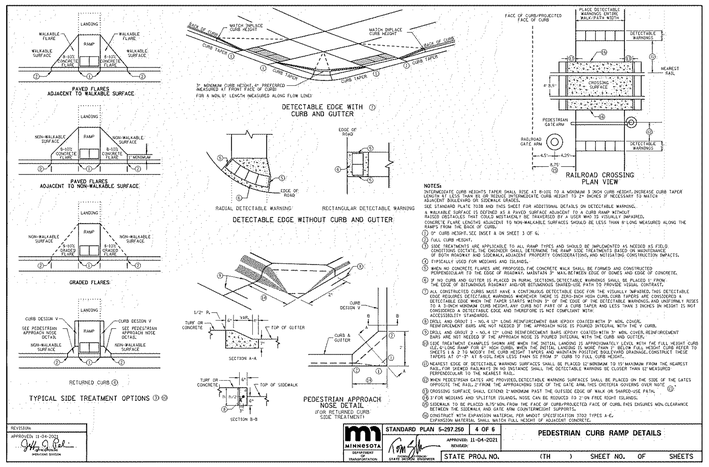

NOTES:

1. INTERMEDIATE CURB HEIGHTS TAPER SHALL BEGIN AT 8-USS TO A MINIMUM 3-INCH CURB HEIGHT.INCREASE CURB TAPER LENGTH BY 1.5' FOR EACH 1' OF REDUCE INTERMEDIATE CURB HEIGHT TO 2# INCHES 3' MEASUREMENT TO MATCH ADJACENT BOULEVARD OR SIDEWALK GRADES.
2. SEE STANDARD PLATE 5138 AND THIS SHEET FOR ADDITIONAL DETAILS ON DETECTABLE WARNING.
3. A WALKABLE SURFACE IS DEFINED AS A PAVED SURFACE ADJACENT TO A CURB RAMP WITHOUT SIGNIFICANT VERTICAL OBSTRUCTIONS. SIDEWALKS, TRAILS, AND PAVED SHOULDERS ARE CONSIDERED WALKABLE SURFACES.
4. CONCRETE FLARE LENGTHS REDUCED TO NON-WALKABLE SURFACES SHOULD BE LESS THAN 8'LONG MEASURED ALONG THE RAMPS FROM THE BACK OF CURB.
5. 0" CURB HEIGHT,SEE DOCT 8 ON SHEET 3 OF 6.
6. FULL CURB HEIGHT.
7. CURB TREATMENTS ARE APPLICABLE TO ALL RAMP TYPES AND SHOULD BE IMPLEMENTED AS NEEDED AS FIELD CONDITIONS DICTATE.IN THE ENGINEER SHALL DETERMINE THE RAMP USE TREATMENTS BASED ON MAINTENANCE OF BOTH ROADWAY AND SIDEWALK,ADJACENT PROPERTY CONSIDERATIONS,AND MITIGATING CONSTRUCTION IMPACTS.
8. TYPICALLY USED FOR MEDIANS AND ISLANDS.
9. WHEN NO CONCRETE FLARES ARE PROVIDED,THE CONCRETE WALK SHALL BE FORMED AND CONSTRUCTED PERPENDICULAR TO THE EDGE OF ROADWAY.MAINTAIN 2' MIN.BETWEEN ENDS OF SIGNS AND EDGE OF CONCRETE.
10. IF NO CURB AND GUTTER IS PLACED ON PAVED SECTIONS DETECTABLE WARNINGS SHALL BE PLACED 6-INCH FROM THE EDGE OF PAVEMENT.DETECTABLE WARNINGS SHALL BE PLACED 6-INCH FROM THE BACK OF CURB.
11. ALL CONSTRUCTED CURBS MUST HAVE A CONTRASTING DETECTABLE EDGE FOR THE VISUALLY IMPAIRED.THIS DETECTABLE EDGE REQUIRES DETECTABLE WARNINGS WHEREVER THERE IS ZERO-INCH HIGH CURB.CURB TAPERS ARE CONSIDERED A DETECTABLE EDGE AND THEREFORE IS NOT COMPLIANT WITH: A CURB TAPER WITH A MAXIMUM 1-INCH HEIGHT TRANSITION OVER 3-INCHES IS A DETECTABLE EDGE AND CURB NOT PART OF A CURB TAPER AND LESS THAN 3-INCHES IN HEIGHT IS NOT CONSIDERED A DETECTABLE EDGE AND THEREFORE IS NOT COMPLIANT WITH:
12. SEE STANDARD PLATE 5138.
13. DRILL AND GROUT 24-BOLA 12" LONG REINFORCEMENT BAR EPOXY COATED WITH 2" MIN. COVER. REINFORCEMENT BARS ARE NOT NEEDED IF THE APPROACH NOSE IS POURED INTEGRAL WITH THE 'U' CURB.
14. DRILL AND GROUT 24-BOLA 12" LONG REINFORCEMENT BARS EPOXY COATED WITH 2" MIN. COVER.REINFORCEMENT BARS ARE NOT NEEDED IF THE APPROACH NOSE IS POURED INTEGRAL WITH THE CURB AND GUTTER.
15. WHEN THE DETECTABLE WARNING IS PLACED ON THE RAMP,THE DETECTABLE WARNING SHALL BE PLACED WITHIN THE FULL HEIGHT CURB SECTION.RAMP FORM OF HIGH-CURBS WHEN THE DETAIL LANDING IS WIDER THAN 10' WITHIN FULL HEIGHT CURB REFER TO SHEETS 1 & 2 TO MODIFY THE CURB HEIGHT TAPERS AND MAINTAIN POSITIVE BOULEVARD DRAINAGE.CONSTRUCT THESE CURB TAPERS WITHIN THE 8-INCH CURB TAPER LENGTH.SEE SHEET 2 FOR CURB TAPER DETAILS.
16. NEAREST EDGE OF DETECTABLE WARNING NOSE SHALL BE PLACED 12 MINIMUM TO 24 MAXIMUM FROM THE NEAREST RAIL,FOR SKEWED RAILWAYS BE NO DISTANCE SHALL THE DETECTABLE WARNING BE CLOSER THAN 12' MEASURED PERPENDICULAR TO THE NEAREST RAIL.
17. WHEN PEDESTRIAN GATES ARE PROVIDED,DETECTABLE WARNING SURFACES SHALL BE PLACED ON THE SIDE OF THE GATES OPPOSITE THE TRACKS.SEE STANDARD PLATE 5138 FOR DETAILS ON DETECTABLE WARNING SURFACE PLACEMENT.
18. CROSSING SURFACES SHALL EXTEND 2-MINIMUM PAST THE OUTSIDE EDGE OF WALK OR SHARED-USE PATH.
19. 1)FOR MEDIANS AND SPLITTER ISLANDS,NOSE CAN BE REDUCED TO 2'ON FREE RIGHT ISLANDS.
20. SIDEWALK TO BE PLACED ALTR WEN FROM THE FACE OF CURB/PROJECTED FACE OF CURB.THIS ENSURES NON-CLEARANCE BETWEEN THE SIDEWALK AND GATE ARM CONTERWEIGHT SUPPORTS.
21. CONSTRUCT WITH EXPANSION MATERIAL PER WMDOT SPECIFICATION 3192 TYPES A & EXPANSION MATERIAL SHALL MATCH FULL HEIGHT OF ADJACENT CONCRETE.

MINNESOTA DEPARTMENT OF TRANSPORTATION

STANDARD PLAN S-297.250 | 4 OF 6 | APPROVED: 11-04-2021 | REVISED:

PEDESTRIAN CURB RAMP DETAILS

STATE PROJ. NO. (TH) SHEET NO. OF SHEETS

REVISION: APPROVED: 11-04-2021

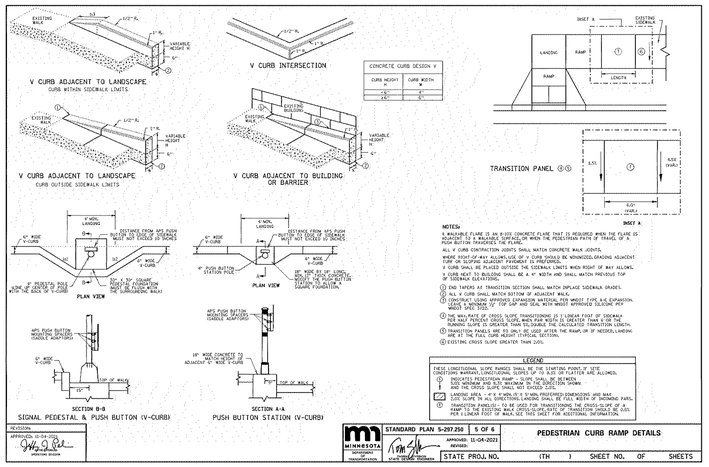

NOTES:

1. A WALKABLE FLARE IS AN 8-USS CONCRETE FLARE THAT IS REQUIRED WHEN THE FLARE IS ADJACENT TO A WALKABLE SURFACE, WHICH THE PEDESTRIAN PATH OF TRAVEL OF A PEDESTRIAN TRANSITIONS TO A FLARE.
2. ALL V CURB CONTRACTION JOINTS SHALL MATCH CONCRETE WALK JOINTS.
3. WHERE RIGHT-OF-WAY ALLOWS,USE OF A CURB SHOULD BE ACKNOWLEDGE.GRADING ADJACENT TURF OR SLOPING ADJACENT PAVEMENT IS PREFERRED.
4. CURB SHALL BE PLACED OUTSIDE THE SIDEWALK LIMITS WHEN RIGHT OF WAY ALLOWS.
5. ALL CURB RAMPS SHALL BE A 4' WIDTH AND SHALL MATCH PREVIOUS TOP OF SIDEWALK ELEVATIONS.
6. END TAPERS AT TRANSITION SECTION SHALL MATCH DRIPLACE SIDEWALK GRADES.
7. ALL V CURB SHALL MATCH BOTTOM OF ADJACENT WALK.
8. CONSTRUCT USING APPROVED EXPANSION MATERIAL PER WMDOT TYPE A,E EXPANSION. LEAVE A MINIMUM 1/2' FOR GAP AND SEAL WITH WMDOT APPROVED SILICONE PER 3192.3.F.2.
9. THE WALK-RATE OF CROSS SLOPE TRANSITIONING IS 1:SIDEAK FOOT OF SIDEWALK PER HALF PEDESTRIAN CROSS SLOPE.WHEN PAR WIDTH IS GREATER THAN 6 OR THE RUNNING SLOPE IS GREATER THAN 5%,DOUBLE THE CALCULATED TRANSITION LENGTH.
10. TRANSITION PANELS ARE 12-INCH. SEE DETAIL.AFTER THE RAMP,OR IF NEEDED,LENGTH. EXCEPT FOR FULL CURB RAMPS.SEE SHEET 2 FOR DETAILS.
11. EXISTING CROSS SLOPE GREATER THAN 2.0%.

LEGEND

THESE LONGITUDINAL SLOPE RANGES SHALL BE THE STARTING POINT OF SITE CONDITIONS WARRANT,LONGITUDINAL SLOPES UP TO 8.3% OR FLATTER ARE ALLOWED.

- INDICATES PEDESTRIAN RAMP - SLOPE SHALL BE BETWEEN 5.0% MINIMUM AND 8.3% MAXIMUM IN THE DIRECTION SHOWN
- LANDING AREA - 4' X 4' MIN.0'X 5' MIN.PREFERRED-DIMENSIONS AND MAX. 2.0% PERPENDICULAR SLOPE IN ALL DIRECTIONS.LANDING SHALL BE FULL WIDTH OF INCOMING PARK.
- TRANSITION PANELS:- TO BE USED FOR TRANSITIONING THE CROSS-SLOPE OF A RAMP TO THE EXISTING WALK CROSS-SLOPE.RATE OF TRANSITION SHOULD BE 0.5% PER 1.LINEAR FOOT OF WALK.SEE THIS SHEET FOR ADDITIONAL INFORMATION.
- CURB HEIGHT

MINNESOTA DEPARTMENT OF TRANSPORTATION

STANDARD PLAN S-297.250 | 5 OF 6 | APPROVED: 11-04-2021 | REVISED:

PEDESTRIAN CURB RAMP DETAILS

STATE PROJ. NO. (TH) SHEET NO. OF SHEETS

REVISION: APPROVED: 11-04-2021

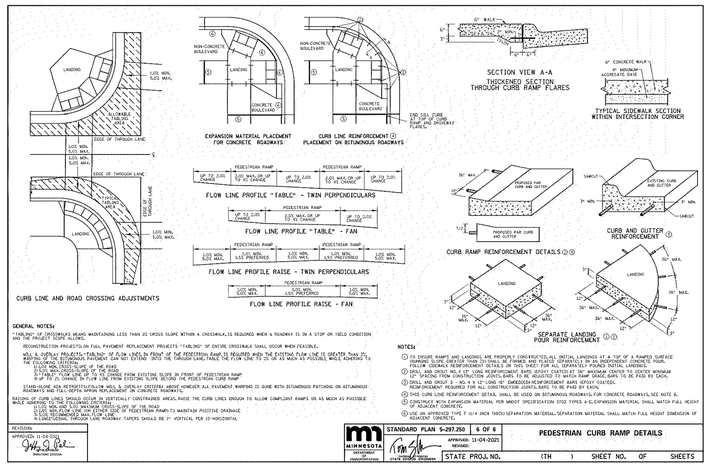

GENERAL NOTES:

1. "TABLING" OF CROSSWALKS MEANS MAINTAINING LESS THAN 2% CROSS SLOPE WITHIN A CROSSWALK.IS REQUIRED WHEN A ROADWAY IS ON A STOP OR YIELD CONDITION AND THE PROJECT SCOPE ALLOWS.

RECONSTRUCTION PROJECTS:ON FULL PAVEMENT REPLACEMENT PROJECTS "TABLING" OF ENTIRE CROSSWALK SHALL OCCUR WHEN FEASIBLE.

WILL A DUPLAY PROJECTS:"TABLING" OF FLOW LINES IN FRONT OF THE PEDESTRIAN RAMP IS REQUIRED WHEN THE EXISTING FLOW LINE IS GREATER THAN 2% PERPENDICULAR.PEDESTRIAN PAVEMENT CAN NOT EXTEND INTO THE THROUGH LANE.TABLE THE FLOW LINE TO 2% OR AS MUCH AS POSSIBLE WHILE ADHERING TO THE FOLLOWING DESIGNS:

1) USE MIN.CROSS-SLOPE OF THE ROAD.
2) TABLE THE FLOW LINE UP TO 2% MAX.
3) TABLE FLOW LINE UP TO 1% CHANGE FROM EXISTING SLOPE IN FRONT OF PEDESTRIAN RAMP
4) UP TO 2% CHANGE TO FLOW LINE FROM EXISTING SLOPE BEHIND THE PEDESTRIAN CURB RAMP

STANDARD PLATE 5138 SHOWS THE MAXIMUM ALLOWABLE CROSS SLOPE.HOWEVER ALL PAVEMENT WARPING IS DONE WITH BITUMINOUS PATCHING ON BITUMINOUS ROADWAYS WE FULL-DEPTH REPAIR REPLACEMENT ON CONCRETE ROADWAYS.

RAISING OF CURB LINES SHOULD OCCUR ON VERTICALLY CONSTRAINED AREAS.RAISE THE CURB LINES ENOUGH TO ALLOW COMPLIANT RAMPS ON 6% WHICH AS POSSIBLE WHILE ADHERING TO THE FOLLOWING CRITERIA:

1) USE MIN.CROSS-SLOPE OF THE ROAD.
2) RAISE THE CURB LINE UP TO 2% MAX.
3) SLOPE BEHIND THE CURB FLOW LINE.
4) LONGITUDINAL THROUGH LANE ROADWAY TAPERS SHOULD BE 2' VERTICAL PER 10'HORIZONTAL

MINNESOTA DEPARTMENT OF TRANSPORTATION

STANDARD PLAN S-297.250 | 6 OF 6 | APPROVED: 11-04-2021 | REVISED:

PEDESTRIAN CURB RAMP DETAILS

STATE PROJ. NO. (TH) SHEET NO. OF SHEETS

REVISION: APPROVED: 11-04-2021

CivilSite GROUP
Civil Engineering • Surveying • Landscape Architecture
5000 Glenwood Avenue
Golden Valley, MN 55422
civilsitegroup.com 612-615-0060

PRELIMINARY: NOT FOR CONSTRUCTION

PROJECT

7200 & 7250 FRANCE

7200 & 7250 FRANCE AVE S, EDINA, MN 55435

ORION INVESTMENTS

6550 YORK AVE S SUITE 207, EDINA, MN 55435

I HEREBY CERTIFY THAT THIS PLAN, SPECIFICATION, OR REPORT WAS PREPARED BY ME OR UNDER MY DIRECT SUPERVISION AND THAT I AM A DULY LICENSED PROFESSIONAL ENGINEER UNDER THE LAWS OF THE STATE OF MINNESOTA.

David J. Knaeble

David J. Knaeble

DATE 1/10/23 LICENSE NO. 48776

ISSUE/SUBMITTAL SUMMARY

DATE	DESCRIPTION
06/20/2022	CITY SUBMITTAL
8/12/2022	PUD SUBMISSION
1/10/23	FINAL PUD SUBMITTAL

DRAWN BY: AM REVIEWED BY: DK

PROJECT NUMBER: 21419

REVISION SUMMARY

DATE	DESCRIPTION

CIVIL DETAILS

C5.2

© COPYRIGHT 2022 CIVIL SITE GROUP INC.