© 2021 Westwood Professional Services, Inc.

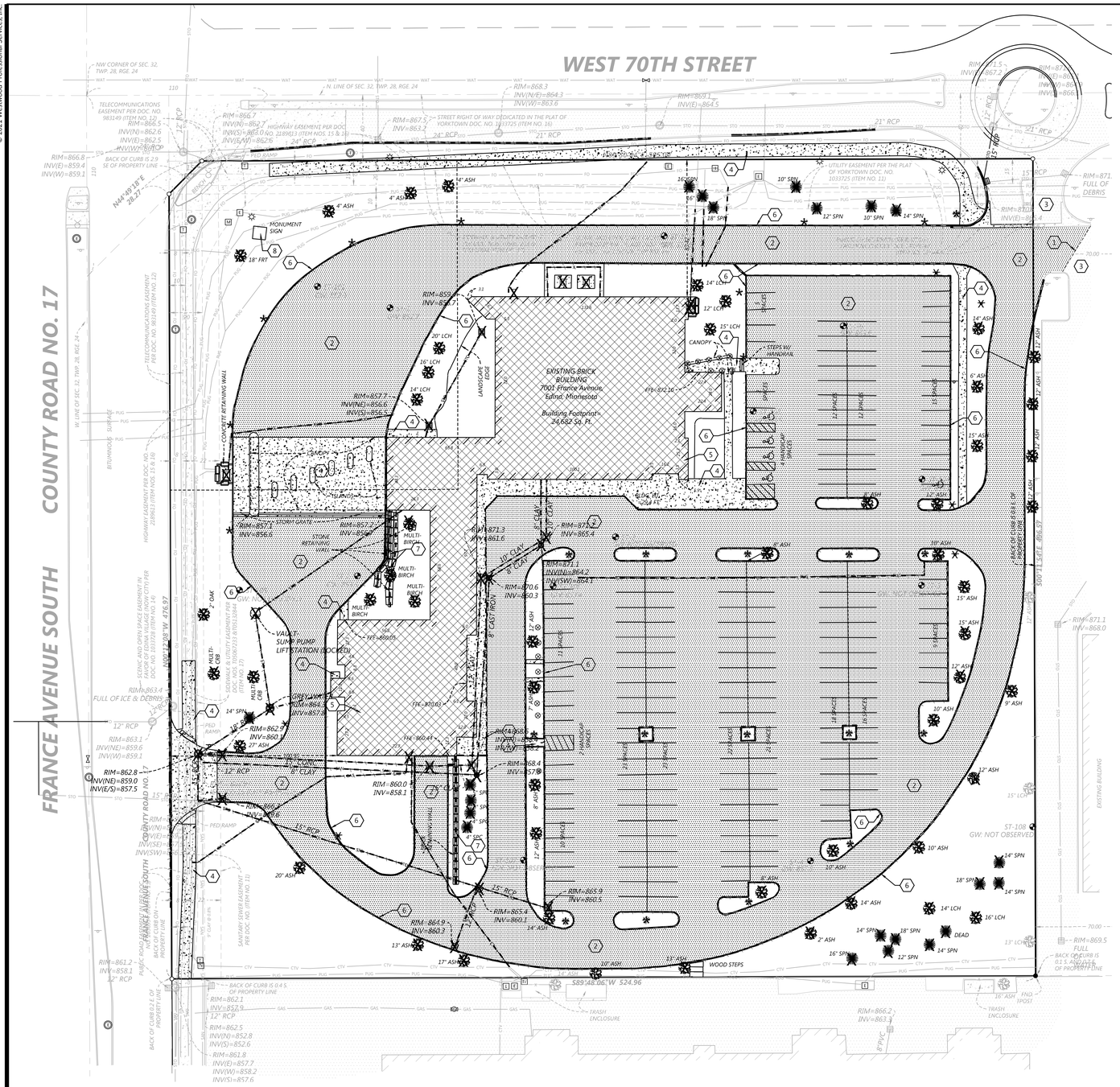

Call 48 Hours before digging:
811 or call811.com
Common Ground Alliance

REMOVAL LEGEND

EXISTING	PROPOSED	
		PROPERTY LINE
		SAW CUT PAVEMENT
EXISTING	REMOVALS	
		CURB & GUTTER
		SANITARY SEWER
		WATER MAIN
		HYDRANT
		STORM SEWER
		GAS
		UNDERGROUND ELECTRIC
		OVERHEAD ELECTRIC
		UNDERGROUND TELEPHONE
		OVERHEAD TELEPHONE
		TELEPHONE FIBER OPTIC
		CABLE TELEVISION
		RETAINING WALL
		FENCE
		CONCRETE
		BITUMINOUS
		BUILDING
		TREE
		LIGHT POLE
		TRAFFIC SIGN
		CONSTRUCTION BARRICADE
SB-19		SOIL BORING LOCATION
		TREE LINE

REMOVAL NOTES

1. LOCATIONS AND ELEVATIONS OF EXISTING TOPOGRAPHY AND UTILITIES AS SHOWN ON THIS PLAN ARE APPROXIMATE. CONTRACTOR SHALL FIELD VERIFY SITE CONDITIONS AND UTILITY LOCATIONS PRIOR TO EXCAVATION/CONSTRUCTION. THE ENGINEER SHALL BE NOTIFIED IMMEDIATELY IF ANY DISCREPANCIES ARE FOUND.
2. CONTRACTOR SHALL COORDINATE LIMITS OF REMOVALS WITH PROPOSED IMPROVEMENTS AND FIELD VERIFY CONDITION OF EXISTING APPURTENANCES TO REMAIN. CONTRACTOR SHALL BE RESPONSIBLE FOR PROTECTING OR REPLACING MISCELLANEOUS ITEMS (SUCH AS FENCES, SIGNS, IRRIGATION HEADS, ETC.) THAT MAY BE DAMAGED BY CONSTRUCTION.
3. CONTRACTOR SHALL PLACE ALL NECESSARY EROSION CONTROL MEASURES REQUIRED TO MAINTAIN SITE STABILITY PRIOR TO EXECUTING ANY SITE REMOVALS.
4. CONTRACTOR SHALL BE RESPONSIBLE FOR COORDINATION WITH UTILITY PROVIDERS FOR REMOVAL AND/OR RELOCATION OF EXISTING UTILITIES AFFECTED BY SITE DEVELOPMENT. ALL PERMITS, APPLICATIONS AND FEES ARE THE RESPONSIBILITY OF THE CONTRACTOR.

TREE REMOVAL QUANTITIES

TREES TO BE REMOVED: 72
TREES TO REMAIN: 4
TOTAL TREES: 76

1 REMOVAL KEYNOTES

1. SAW CUT LINE
2. REMOVE BITUMINOUS
3. EXISTING BITUMINOUS TO REMAIN
4. REMOVE CONCRETE
5. REMOVE EXISTING BUILDING
6. REMOVE CURB
7. REMOVE RETAINING WALL
8. REMOVE MONUMENT SIGN

1" = 30'
0' 30' 60' 90'

NOT FOR CONSTRUCTION

DESIGNED:
CHECKED:
DRAWN:
HORIZONTAL SCALE: ###
VERTICAL SCALE: ### or ##

INITIAL ISSUE:	10/16/2020
REVISIONS:	
01/25/2021	US BANK FINAL DEVELOPMENT SUBMITTAL

PREPARED FOR:
ORION/MORTENSON
4530 WEST 77TH STREET SUITE #365
EDINA, MN 55435

I HEREBY CERTIFY THAT THIS PLAN WAS PREPARED BY ME OR UNDER MY DIRECT SUPERVISION AND THAT I AM A DULY LICENSED PROFESSIONAL ENGINEER UNDER THE LAWS OF THE STATE OF MINNESOTA.

DAVID T. BADE
DATE: 01/25/2021 LICENSE NO. ____

70TH AND FRANCE REDEVELOPMENT
EDINA, MN

Westwood
Phone (952) 937-5150
Fax (952) 937-5822
Toll Free (888) 937-5150
12701 Whitewater Drive, Suite #200
Minnetonka, MN 55343
www.westwoodps.com
Westwood Professional Services, Inc.

EXISTING CONDITIONS AND REMOVALS PLAN

SHEET NUMBER:
C100

DATE: 01/25/2021

70TH AND FRANCE REDEVELOPMENT

PROJECT NUMBER: 0029211.10

N:\0029211.10\DWG\CIVIL\0029211.10RM01.DWG

© 2021 Westwood Professional Services, Inc.

Call 48 Hours before digging:
811 or call811.com
Common Ground Alliance

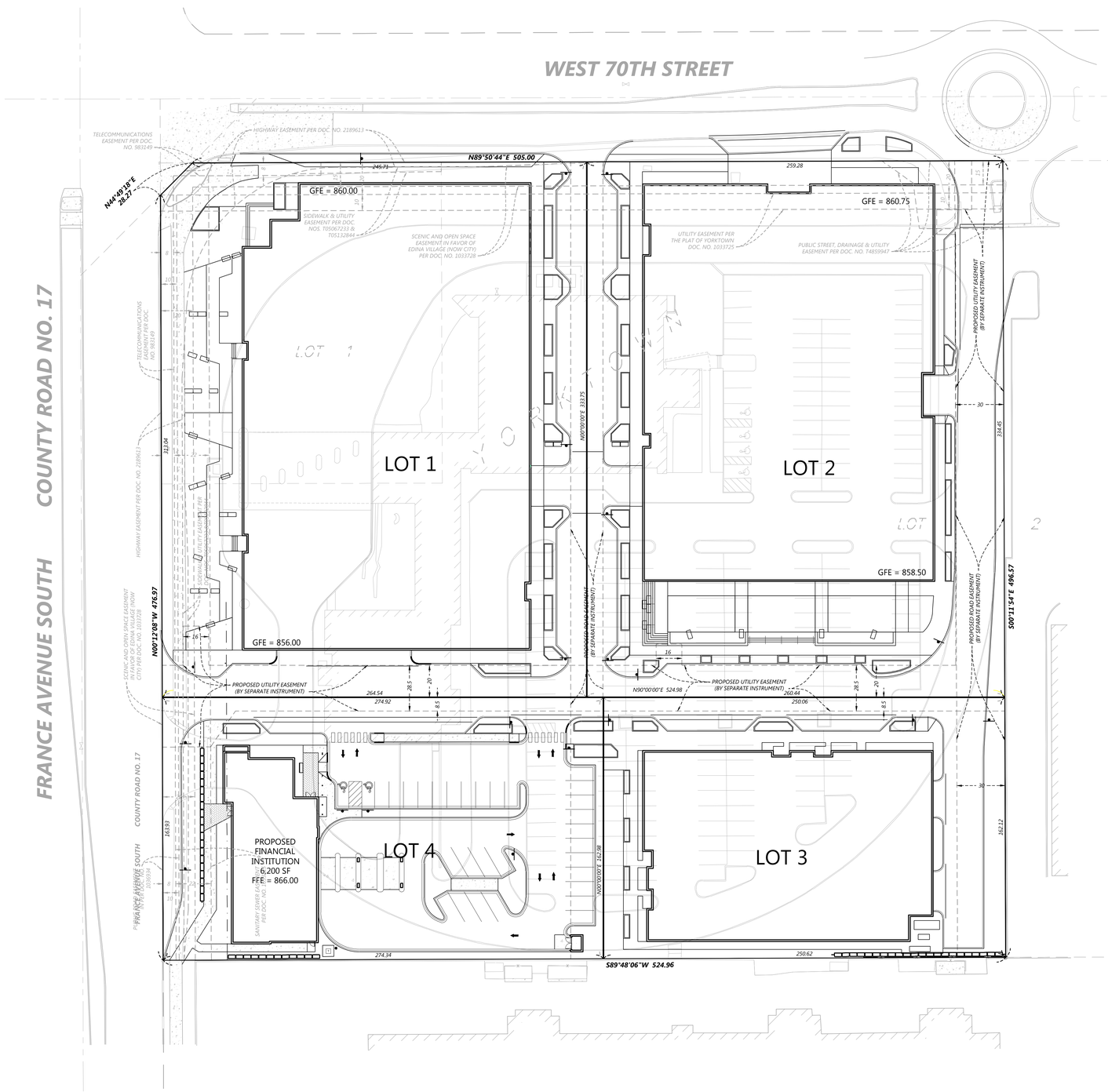

SITE DATA CHART

LEGAL DESCRIPTION	PROPOSED USE	LOT AREA (ACRE)
LOT 1	OFFICE/GROCERY	2.02 AC.
LOT 2	MULTI-FAMILY RESIDENTIAL	1.99 AC.
LOT 3	SENIOR HOUSING	0.93 AC.
LOT 4	BANK	1.03 AC.
TOTAL		5.97 AC.

ZONING

EXISTING: PCD-3 - PLANNED COMMERCIAL

PROPOSED: PUD - PLANNED UNIT DEVELOPMENT

OWNER / SUBDIVIDER

Orion/Mortenson
4530 West 77th St., Ste. 365
Edina, MN 55435

ENGINEER

WESTWOOD PROFESSIONAL SERVICES
12701 WHITEWATER DRIVE, SUITE 300,
MINNETONKA, MINNESOTA 55343
Phone: 952-937-5150

1" = 30'
0' 30' 60' 90'

NOT FOR CONSTRUCTION

DESIGNED: PMC
CHECKED: BH
DRAWN: BH
HORIZONTAL SCALE: 30'
VERTICAL SCALE: 6' or 3'

INITIAL ISSUE: 10/16/20
REVISIONS:
01/25/2021 US BANK FINAL DEVELOPMENT SUBMITTAL

PREPARED FOR:
ORION/MORTENSON
4530 WEST 77TH STREET SUITE #365
EDINA, MN 55435

I HEREBY CERTIFY THAT THIS PLAN WAS PREPARED BY ME OR UNDER MY DIRECT SUPERVISION AND THAT I AM A DULY LICENSED LANDSCAPE ARCHITECT UNDER THE LAWS OF THE STATE OF MINNESOTA.
Nathan H. Carlson
DATE: 10/16/20 LICENSE NO. 45873

70TH AND FRANCE REDEVELOPMENT
EDINA, MN

Westwood
Phone (952) 937-5150 12701 Whitewater Drive, Suite #300
Fax (952) 937-5822 Minnetonka, MN 55343
Toll Free (888) 746-3046 www.westwoodps.com
Westwood Professional Services, Inc.

PRELIMINARY PLAT

SHEET NUMBER:
C101

DATE: 10/16/20

70TH AND FRANCE REDEVELOPMENT

PROJECT NUMBER: 0029211.10

N:\0029211.10\DWG\CIVIL\0029211.10PP01.DWG

© 2021 Westwood Professional Services, Inc.

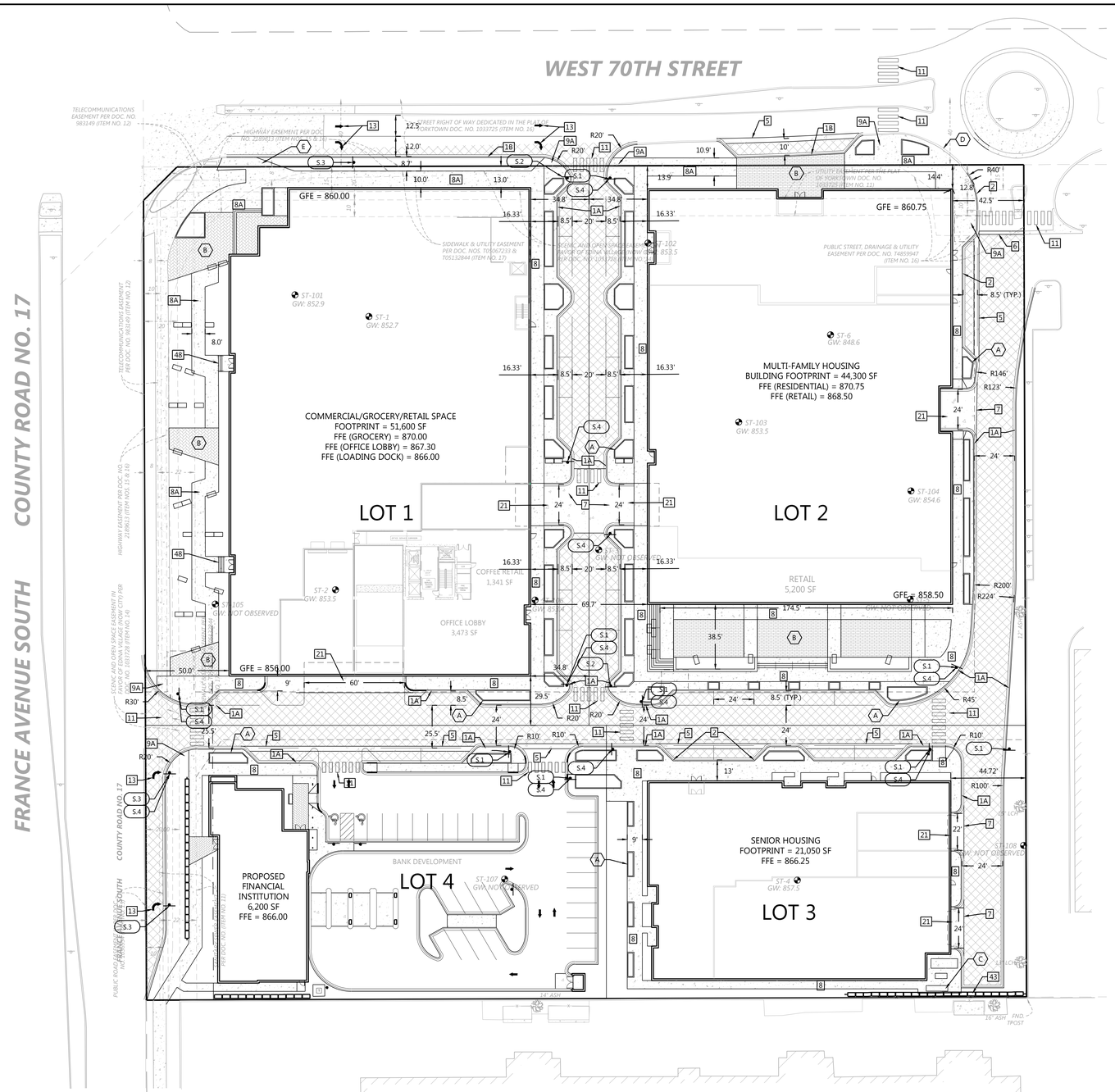

SITE LEGEND

EXISTING	PROPOSED	
		PROPERTY LINE
		LOT LINE
		SETBACK LINE
		EASEMENT LINE
		CURB AND GUTTER
		TIP-OUT CURB AND GUTTER
		POND NORMAL WATER LEVEL
		RETAINING WALL
		FENCE
		CONCRETE PAVEMENT
		CONCRETE SIDEWALK
		HEAVY DUTY BITUMINOUS PAVEMENT
		NORMAL DUTY BITUMINOUS PAVEMENT
		NUMBER OF PARKING STALLS
		TRANSFORMER
		SITE LIGHTING
		TRAFFIC SIGN
		POWER POLE
		BOLLARD / POST

GENERAL SITE NOTES

1. BACKGROUND INFORMATION FOR THIS PROJECT PROVIDED BY WESTWOOD PROFESSIONAL SERVICES, MINNETONKA, MN, 2020.
2. LOCATIONS AND ELEVATIONS OF EXISTING TOPOGRAPHY AND UTILITIES AS SHOWN ON THIS PLAN ARE APPROXIMATE. CONTRACTOR SHALL FIELD VERIFY SITE CONDITIONS AND UTILITY LOCATIONS PRIOR TO EXCAVATION/CONSTRUCTION. IF ANY DISCREPANCIES ARE FOUND, THE ENGINEER SHOULD BE NOTIFIED IMMEDIATELY.
3. REFER TO BOUNDARY SURVEY FOR LOT BEARINGS, DIMENSIONS AND AREAS.
4. ALL DIMENSIONS ARE TO FACE OF CURB OR EXTERIOR FACE OF BUILDING UNLESS OTHERWISE NOTED.
5. REFER TO ARCHITECTURAL PLANS FOR EXACT BUILDING DIMENSIONS AND LOCATIONS OF EXITS, RAMPS, AND TRUCK DOCKS.
6. ALL CURB RADII ARE SHALL BE 5.0 FEET (TO FACE OF CURB) UNLESS OTHERWISE NOTED.
7. ALL CURB AND GUTTER SHALL BE B612 UNLESS OTHERWISE NOTED.
8. THE CONTRACTOR SHALL BE RESPONSIBLE FOR PROVIDING AND MAINTAINING TRAFFIC CONTROL DEVICES SUCH AS BARRICADES, WARNING SIGNS, DIRECTIONAL SIGNS, FLAGGERS AND LIGHTS TO CONTROL THE MOVEMENT OF TRAFFIC WHERE NECESSARY. PLACEMENT OF THESE DEVICES SHALL BE APPROVED BY THE CITY AND ENGINEER PRIOR TO PLACEMENT. TRAFFIC CONTROL DEVICES SHALL CONFORM TO APPROPRIATE MNDOT STANDARDS.
9. BITUMINOUS PAVEMENT AND CONCRETE SECTIONS TO BE IN ACCORDANCE WITH THE RECOMMENDATIONS OF THE GEOTECHNICAL ENGINEER.
10. CONTRACTOR SHALL MAINTAIN FULL ACCESS TO ADJACENT PROPERTIES DURING CONSTRUCTION AND TAKE ALL PRECAUTIONS NECESSARY TO AVOID PROPERTY DAMAGE TO ADJACENT PROPERTIES.
11. SITE LIGHTING SHOWN ON PLAN IS FOR REFERENCE ONLY. REFER TO LIGHTING PLAN PREPARED BY OTHERS FOR SITE LIGHTING DETAILS AND PHOTOMETRICS.

SITE DEVELOPMENT SUMMARY

- EXISTING ZONING: PDC-3, PLANNED COMMERCIAL
- PROPOSED ZONING: PUD - PLANNED UNIT DEVELOPMENT
- PARCEL DESCRIPTION: LOT 1, BLOCK 1, YORKTOWN, HENNEPIN COUNTY, MINNESOTA
- PROPERTY AREA: 260,594 SF (5.98 AC)
- PERVIOUS SURFACE: 71,861 SF (27.6%)
- IMPERVIOUS SURFACE(RATIO): 188,733 SF (72.4%)
- FLOOR-AREA-RATIO(FAR): SEE ARCH PLANS
- BUILDING SETBACK PER CODE: ***XX'***=FRONT ***XX'***=SIDE / ***XX'***=SIDE TO ROW ***XX'***=REAR

SITE DATA CHART

LEGAL DESCRIPTION	PROPOSED USE	LOT AREA (ACRE)	BLDG FOOTPRINT AREA (SF)
LOT 1	OFFICE/GROCERY	2.02 AC.	51,600
LOT 2	MULTI-FAMILY RESIDENTIAL	1.99 AC.	44,300
LOT 3	SENIOR HOUSING	0.93 AC.	21,050
LOT 4	BANK	1.03 AC.	6,100
TOTAL	-	5.98 AC.	123,050

Call 48 Hours before digging:
811 or call811.com
Common Ground Alliance

1 SITE DETAILS (SI-0XX)

1A B612 CURB AND GUTTER
1B B618 CURB AND GUTTER
2 SURMOUNTABLE CURB AND GUTTER
5 VALLEY GUTTER
6 CONCRETE CROSS GUTTER
7 ENTRANCE THRU CURB AND GUTTER
8 PRIVATE CONCRETE SIDEWALK
8A PUBLIC CONCRETE SIDEWALK
9 PRIVATE PEDESTRIAN CURB RAMP
9A PUBLIC PEDESTRIAN CURB RAMP
11 CROSS WALK STRIPING
13 TRAFFIC ARROW
14 SIGN INSTALLATION
19 PAVEMENT SECTIONS
21 HEAVY DUTY CONCRETE SECTION
22 SAW CUT CONTROL JOINT
24 CONCRETE CURB AT SIDEWALK
31 TRANSITION CURB (B612)
43 RETAINING WALL WITH FENCE USING SLEEVE-IT SYSTEM
45 B612 AND SURMOUNTABLE CURB TRANSITION
48 CONCRETE STAIR AND RAILING DETAIL

X SITE KEYNOTES

A. PLANTER CURB (TYP.)
B. CONCRETE PAVERS (TYP.)
C. GENERATOR
D. EXISTING SURMOUNTABLE CURB IN ROUNDABOUT
E. BIKE LANE EXIT RAMP ONTO SHARED SIDEWALK

S.10 SIGN LEGEND

REFERENCE
S.1 STOP SIGN
S.2 NO TRUCKS
S.3 RIGHT LANE MUST TURN RIGHT
S.4 PEDESTRIAN CROSSING

1" = 30'
0' 30' 60' 90'

NOT FOR CONSTRUCTION

DESIGNED:
CHECKED:
DRAWN:
HORIZONTAL SCALE: 30'
VERTICAL SCALE: 6' or 3'

INITIAL ISSUE: 10/16/2020
REVISIONS:
01/25/2021 US BANK FINAL DEVELOPMENT SUBMITTAL

PREPARED FOR:
ORION/MORTENSON
4530 WEST 77TH STREET SUITE #365
EDINA, MN 55435

I HEREBY CERTIFY THAT THIS PLAN WAS PREPARED BY ME OR UNDER MY DIRECT SUPERVISION AND THAT I AM A DULY LICENSED PROFESSIONAL ENGINEER UNDER THE LAWS OF THE STATE OF MINNESOTA.
DAVID T. BADE
DATE 01/25/2021 LICENSE NO. ____

70TH AND FRANCE REDEVELOPMENT
EDINA, MN

Westwood
Phone (952) 937-5150 12701 Whitewater Drive, Suite #200
Fax (952) 937-5822 Minnetonka, MN 55343
Toll Free (888) 937-5150 westwoodps.com
Westwood Professional Services, Inc.

SITE PLAN

SHEET NUMBER:
C200

DATE: 01/25/2021

70TH AND FRANCE REDEVELOPMENT

PROJECT NUMBER: 0029211.10

N:\0029211.10\DWG\CIVIL\0029211.10SP01.DWG

© 2021 Westwood Professional Services, Inc.

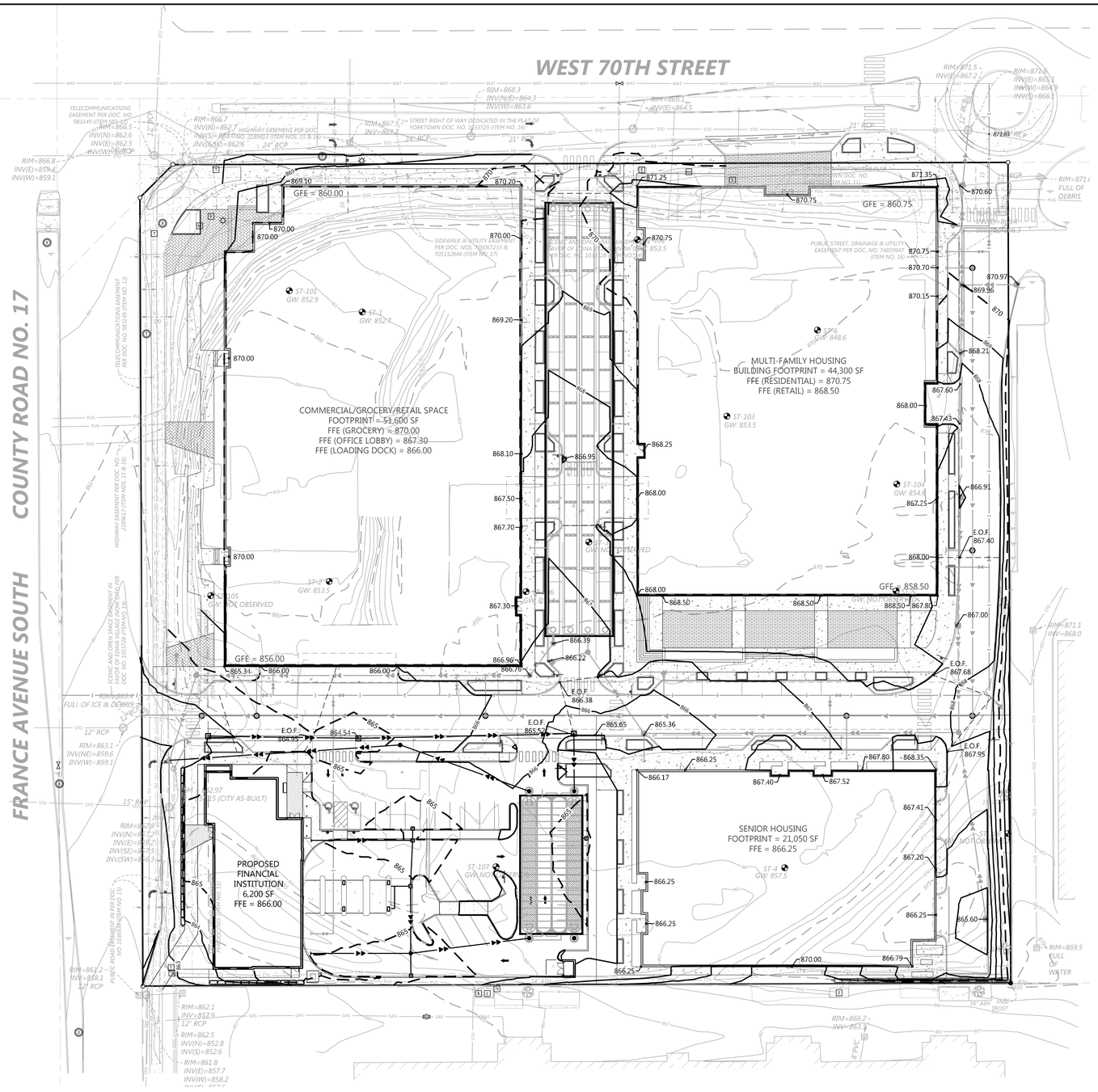

GRADING LEGEND

EXISTING	PROPOSED	
		PROPERTY LINE
980	980	INDEX CONTOUR
982	982	INTERVAL CONTOUR
		CURB AND GUTTER
		POND NORMAL WATER LEVEL
STO		STORM SEWER
		FLARED END SECTION (WITH RIPRAP)
WAT		WATER MAIN
SAN		SANITARY SEWER
		RETAINING WALL
		DRAIN TILE
		RIDGE LINE
	GL	GRADING LIMITS
× 900.00	× 900.00	SPOT ELEVATION
	0.0%	FLOW DIRECTION
	TW=XXX.XX BW=XXX.XX	TOP AND BOTTOM OF RETAINING WALL
	E.O.F.	EMERGENCY OVERFLOW
SB-19	SB-19	SOIL BORING LOCATION

GRADING NOTES

1. LOCATIONS AND ELEVATIONS OF EXISTING TOPOGRAPHY AND UTILITIES AS SHOWN ON THIS PLAN ARE APPROXIMATE. CONTRACTOR SHALL FIELD VERIFY SITE CONDITIONS AND UTILITY LOCATIONS PRIOR TO EXCAVATION/CONSTRUCTION. THE ENGINEER SHALL BE NOTIFIED IMMEDIATELY IF ANY DISCREPANCIES ARE FOUND.
2. CONTRACTORS SHALL REFER TO ARCHITECTURAL PLANS FOR EXACT LOCATIONS AND DIMENSIONS OF VESTIBULE, SLOPED PAVEMENT, EXIT PORCHES, RAMPS, TRUCK DOCKS, PRECISE BUILDING DIMENSIONS, EXACT BUILDING UTILITY ENTRANCE LOCATIONS, AND EXACT LOCATIONS AND NUMBER OF DOWNSPOUTS.
3. ALL EXCAVATION SHALL BE IN ACCORDANCE WITH THE CURRENT EDITION OF "STANDARD SPECIFICATIONS FOR TRENCH EXCAVATION AND BACKFILL/SURFACE RESTORATION" AS PREPARED BY THE CITY ENGINEERS ASSOCIATION OF MINNESOTA.
4. ALL DISTURBED UNPAVED AREAS ARE TO RECEIVE FOUR INCHES OF TOPSOIL AND SOD OR SEED. THESE AREAS SHALL BE WATERED UNTIL A HEALTHY STAND OF GRASS IS OBTAINED. SEE LANDSCAPE PLAN FOR PLANTING AND TURF ESTABLISHMENT.
5. THE CONTRACTOR SHALL BE RESPONSIBLE FOR PROVIDING AND MAINTAINING TRAFFIC CONTROL DEVICES SUCH AS BARRICADES, WARNING SIGNS, DIRECTIONAL SIGNS, FLAGMEN AND LIGHTS TO CONTROL THE MOVEMENT OF TRAFFIC WHERE NECESSARY. PLACEMENT OF THESE DEVICES SHALL BE APPROVED BY THE ENGINEER PRIOR TO PLACEMENT. TRAFFIC CONTROL DEVICES SHALL CONFORM TO APPROPRIATE MNDOT STANDARDS.
6. ALL SLOPES SHALL BE GRADED TO 3:1 OR FLATTER, UNLESS OTHERWISE INDICATED ON THIS SHEET.
7. CONTRACTOR SHALL UNIFORMLY GRADE AREAS WITHIN LIMITS OF GRADING AND PROVIDE A SMOOTH FINISHED SURFACE WITH UNIFORM SLOPES BETWEEN POINTS WHERE ELEVATIONS ARE SHOWN OR BETWEEN SUCH POINTS AND EXISTING GRADES.
8. **SPOT ELEVATIONS SHOWN INDICATE FINISHED PAVEMENT ELEVATIONS & GUTTER FLOW LINE UNLESS OTHERWISE NOTED. PROPOSED CONTOURS ARE TO FINISHED SURFACE GRADE.**
9. SEE SOILS REPORT FOR PAVEMENT THICKNESSES AND HOLD DOWNS.
10. CONTRACTOR SHALL DISPOSE OF ANY EXCESS SOIL MATERIAL THAT EXISTS AFTER THE SITE GRADING AND UTILITY CONSTRUCTION IS COMPLETED. THE CONTRACTOR SHALL DISPOSE OF ALL EXCESS SOIL MATERIAL IN A MANNER ACCEPTABLE TO THE OWNER AND THE REGULATING AGENCIES.
11. CONTRACTOR SHALL PROVIDE A STRUCTURAL RETAINING WALL DESIGN CERTIFIED BY A LICENSED PROFESSIONAL ENGINEER.
12. ALL CONSTRUCTION SHALL CONFORM TO LOCAL, STATE AND FEDERAL RULES INCLUDING THE NATIONAL POLLUTANT DISCHARGE ELIMINATION SYSTEM (NPDES) PERMIT REQUIREMENTS.
13. PRIOR TO PLACEMENT OF ANY STRUCTURE OR PAVEMENT, A PROOF ROLL, AT MINIMUM, WILL BE REQUIRED ON THE SUBGRADE. PROOF ROLLING SHALL BE ACCOMPLISHED BY MAKING MINIMUM OF 2 COMPLETE PASSES WITH FULLY-LOADED TANDEM-AXLE DUMP TRUCK, OR APPROVED EQUAL, IN EACH OF 2 PERPENDICULAR DIRECTIONS WHILE UNDER SUPERVISION AND DIRECTION OF THE INDEPENDENT TESTING LABORATORY. AREAS OF FAILURE SHALL BE EXCAVATED AND RE-COMPACTED AS SPECIFIED HEREIN.
14. EMBANKMENT MATERIAL PLACED BENEATH BUILDINGS AND STREET OR PARKING AREAS SHALL BE COMPACTED IN ACCORDANCE WITH THE SPECIFIED DENSITY METHOD AS OUTLINED IN MNDOT 2105.3F1 AND THE REQUIREMENTS OF THE GEOTECHNICAL ENGINEER.
15. EMBANKMENT MATERIAL NOT PLACED IN THE BUILDING PAD, STREETS OR PARKING AREA, SHALL BE COMPACTED IN ACCORDANCE WITH REQUIREMENTS OF THE ORDINARY COMPACTION METHOD AS OUTLINED IN MNDOT 2105.3F2.
16. ALL SOILS AND MATERIALS TESTING SHALL BE COMPLETED BY AN INDEPENDENT GEOTECHNICAL ENGINEER. EXCAVATION FOR THE PURPOSE OF REMOVING UNSTABLE OR UNSUITABLE SOILS SHALL BE COMPLETED AS REQUIRED BY THE GEOTECHNICAL ENGINEER. THE CONTRACTOR SHALL BE RESPONSIBLE FOR COORDINATING ALL REQUIRED SOILS TESTS AND INSPECTIONS WITH THE GEOTECHNICAL ENGINEER.

FILTRATION/INFILTRATION BASIN NOTES

1. BASIN EXCAVATION AND PIPE INSTALLATION MAY TAKE PLACE BEFORE CURB INSTALLATION. ALL OTHER BASIN CONSTRUCTION MUST WAIT UNTIL FINAL SITE LANDSCAPING. REMOVE SEDIMENT FROM EXCAVATED BASIN PRIOR TO PLACEMENT OF FILTER MEDIA. PLACE SAND BAGS OR SIMILAR ITEM IN CURB CUTS TO PRE-FILTER STORM WATER UNTIL PLANTS ARE ESTABLISHED IN BASINS. MAINTAIN INLET PROTECTION ON DOWN STREAM INLETS UNTIL BASINS ARE ON-LINE.
2. BASIN EXCAVATION SHALL BE WITH TOOTHED-BUCKETS TO SCARIFY THE BOTTOM.
3. PLACE SILT FENCE AROUND BASINS AS SHOWN IMMEDIATELY AFTER BASIN CONSTRUCTION.
4. BASINS MUST BE TESTED FOR INFILTRATION RATE AFTER TOTAL SITE STABILIZATION. A DUAL RING INFILTROMETER SHALL BE USED FOR TESTING. MINIMUM INFILTRATION RATE IS 1-INCH PER HOUR. IF BASIN DOES NOT MEET INFILTRATION RATE, CONTRACTOR MUST TAKE CORRECTIVE ACTION UNTIL MINIMUM INFILTRATION RATE IS MET. CORRECTIVE ACTION MAY INCLUDE REMOVING PLUG IN DRAIN TILE. ALL TESTING AND CORRECTIVE ACTION SHALL BE THE RESPONSIBILITY OF THE CONTRACTOR, AND SHALL BE INCIDENTAL TO THE CONTRACT, WITH NO DIRECT COMPENSATION MADE.

SOIL REPLACEMENT NOTE

GEOTECHNICAL EVALUATIONS FOUND A LAYER OF CLAYEY SAND APPROXIMATELY 4 FEET BELOW THE BOTTOM OF THE PROPOSED INFILTRATION CHAMBERS. SHOULD THIS MATERIAL BE ENCOUNTERED DURING CONSTRUCTION, THE EXISTING CLAYEY SAND MUST BE REMOVED AND REPLACED WITH MATERIAL HAVING AN INFILTRATION RATE COMPARABLE WITH THE POORLY-GRADED SAND LOCATED AT THE BOTTOM OF THE SYSTEM.

1" = 30'

0' 30' 60' 90'

NOT FOR CONSTRUCTION

Call 48 Hours before digging:
811 or call811.com
Common Ground Alliance

DESIGNED:
CHECKED:
DRAWN:
HORIZONTAL SCALE: ###
VERTICAL SCALE: ### or ##

INITIAL ISSUE: 10/16/2020
REVISIONS:
01/25/2021 US BANK FINAL DEVELOPMENT SUBMITTAL

PREPARED FOR:
ORION/MORTENSON
4530 WEST 77TH STREET SUITE #365
EDINA, MN 55435

I HEREBY CERTIFY THAT THIS PLAN WAS PREPARED BY ME OR UNDER MY DIRECT SUPERVISION AND THAT I AM A DULY LICENSED PROFESSIONAL ENGINEER UNDER THE LAWS OF THE STATE OF MINNESOTA.

DAVID T. BADE
DATE 01/25/2021 LICENSE NO. ____

70TH AND FRANCE REDEVELOPMENT
EDINA, MN

Westwood
Phone (952) 937-5150 12701 Whitewater Drive, Suite #200
Fax (952) 937-5822 Minnetonka, MN 55343
Toll Free (888) 937-5150 www.westwoodps.com
Westwood Professional Services, Inc.

GRADING PLAN

SHEET NUMBER:
C300

DATE: 01/25/2021

70TH AND FRANCE REDEVELOPMENT

PROJECT NUMBER: 0029211.10

N:\0029211.10\DWG\CIVIL\0029211.10GD01.DWG

© 2021 Westwood Professional Services, Inc.

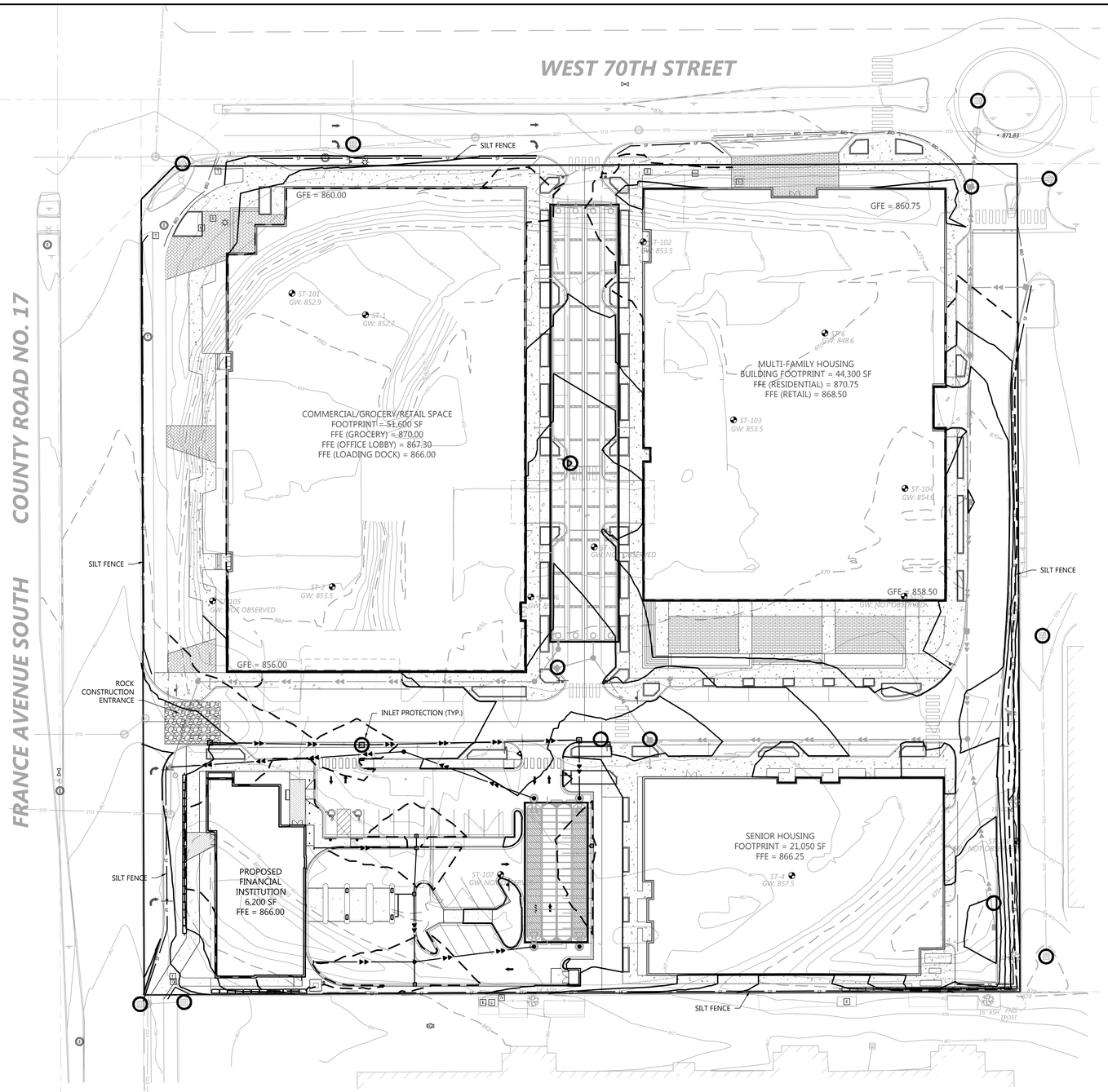

Call 48 Hours before digging:
811 or call811.com
Common Ground Alliance

EROSION CONTROL LEGEND

EXISTING	PROPOSED	
		PROPERTY LINE
980	980	INDEX CONTOUR
982	982	INTERVAL CONTOUR
		CURB AND GUTTER
		POND NORMAL WATER LEVEL
	SF	SILT FENCE
	HDSF	HEAVY DUTY SILT FENCE
	BIO	BIOROLL
STO		STORM SEWER
		FLARED END SECTION (WITH RIPRAP)
WAT		WATER MAIN
SAN		SANITARY SEWER
		RETAINING WALL
		DRAIN TILE
	GL	GRADING LIMITS
		ROCK CONSTRUCTION ENTRANCE
		EROSION CONTROL BLANKET
		TURF REINFORCEMENT MAT
	E.O.F.	EMERGENCY OVERFLOW
SB-19	SB-19	SOIL BORING LOCATION
		INLET PROTECTION

GENERAL EROSION CONTROL NOTES

1. THE CONTRACTOR IS SPECIFICALLY CAUTIONED THAT THE LOCATION AND/OR ELEVATION OF EXISTING UTILITIES AS SHOWN ON THESE PLANS ARE BASED ON RECORDS OF THE VARIOUS UTILITY COMPANIES AND LIMITED MEASUREMENTS TAKEN IN THE FIELD. THE INFORMATION SHALL NOT BE RELIED ON AS BEING EXACT OR COMPLETE. THE CONTRACTOR SHALL VERIFY EXISTING CONDITIONS PRIOR TO CONSTRUCTION AND NOTIFY THE OWNER OR ENGINEER OF DISCREPANCIES.

2. ALL SILT FENCE AND OTHER EROSION CONTROL FEATURES SHALL BE IN-PLACE PRIOR TO ANY EXCAVATION/CONSTRUCTION AND SHALL BE MAINTAINED UNTIL VIABLE TURF OR GROUND COVER HAS BEEN ESTABLISHED. EXISTING SILT FENCE ON-SITE SHALL BE MAINTAINED AND OR REMOVED AND SHALL BE CONSIDERED INCIDENTAL TO THE GRADING CONTRACT. IT IS OF EXTREME IMPORTANCE TO BE AWARE OF CURRENT FIELD CONDITIONS WITH RESPECT TO EROSION CONTROL. TEMPORARY PONDING, DIKES, HAYBALES, ETC., REQUIRED BY THE CITY SHALL BE INCIDENTAL TO THE GRADING CONTRACT.

3. EROSION AND SILTATION CONTROL (ESC): THE CONTRACTOR SHALL ASSUME COMPLETE RESPONSIBILITY FOR CONTROLLING ALL SILTATION AND EROSION OF THE PROJECT AREA. THE CONTRACTOR SHALL USE WHATEVER MEANS NECESSARY TO CONTROL THE EROSION AND SILTATION INCLUDING BUT NOT LIMITED TO: CATCH BASIN INSERTS, CONSTRUCTION ENTRANCES, EROSION CONTROL BLANKET, AND SILT FENCE. ESC SHALL COMMENCE WITH GRADING AND CONTINUE THROUGHOUT THE PROJECT UNTIL ACCEPTANCE OF THE WORK BY THE OWNER. THE CONTRACTOR'S RESPONSIBILITY INCLUDES ALL IMPLEMENTATION AS REQUIRED TO PREVENT EROSION AND THE DEPOSITING OF SILT. THE OWNER MAY DIRECT THE CONTRACTOR'S METHODS AS DEEMED FIT TO PROTECT PROPERTY AND IMPROVEMENTS. ANY DEPOSITION OF SILT OR MUD ON NEW OR EXISTING PAVEMENT OR IN EXISTING STORM SEWERS OR SWALES SHALL BE REMOVED AFTER EACH RAIN EVENT. AFFECTED AREAS SHALL BE CLEANED TO THE SATISFACTION OF THE OWNER. ALL AT THE EXPENSE OF THE CONTRACTOR. ALL TEMPORARY EROSION CONTROL SHALL BE REMOVED BY THE CONTRACTOR AFTER THE TURF IS ESTABLISHED.

4. ALL STREETS DISTURBED DURING WORKING HOURS MUST BE CLEANED AT THE END OF EACH WORKING DAY. A CONSTRUCTION ENTRANCE TO THE SITE MUST BE PROVIDED ACCORDING TO DETAILS TO REDUCE TRACKING OF DIRT ONTO PUBLIC STREETS.

5. PROPOSED PONDS SHALL BE EXCAVATED FIRST AND USED AS TEMPORARY PONDING DURING CONSTRUCTION.

6. WHEN INSTALLING END-OF-LINE FLARED END SECTIONS, BRING THE SILT FENCE UP & OVER THE FLARED END SECTIONS & COVER DISTURBED AREAS WITH RIP RAP. THE UPSTREAM FLARED END SECTIONS SHALL HAVE WOOD FIBER BLANKET INSTALLED ON THE DISTURBED SOILS.

7. ALL UNPAVED AREAS ALTERED DUE TO CONSTRUCTION ACTIVITIES MUST BE RESTORED WITH SEED AND MULCH, SOD. EROSION CONTROL BLANKET OR BE HARD SURFACE WITHIN 2 WEEKS OF COMPLETION OF CONSTRUCTION.

8. THE SITE MUST BE STABILIZED PER THE REQUIREMENTS OF THE MPCA, NPDES, MNDOT, AND CITY.
   - A. TEMPORARY (GREATER THAN 1-YEAR) SEED SHALL BE MNDOT SEED MIX 22-111 AT 30.5-POUNDS PER ACRE.
   - B. TEMPORARY (LESS THAN 1-YEAR) SEED SHALL BE MNDOT SEED MIX 21-112 (FALL) OR 21-111 (SPRING/SUMMER) AT 100-POUNDS PER ACRE
   - C. INFILTRATION/FILTRATION BASIN SHALL BE MNDOT SEED MIX 34-262 AT 14.5-POUNDS PER ACRE.
   - D. POND SLOPES SHALL BE MNDOT SEED MIX 33-261 AT 35-POUNDS PER ACRE.
   - E. GENERAL SEEDING SHALL BE MNDOT SEED MIX 25-151 AT 70-POUNDS PER ACRE.
   - F. MULCH SHALL BE MNDOT TYPE 1 APPLIED AT 2-TONS PER ACRE.

9. FOR AREAS WITH SLOPE OF 3:1 OR GREATER, RESTORATION WITH SOD OR EROSION CONTROL BLANKET IS REQUIRED.

10. ALL TEMPORARY STOCKPILES MUST HAVE SILT FENCE INSTALLED AROUND THEM TO TRAP SEDIMENT.

11. ALL PERMANENT PONDS USED AS TEMPORARY SEDIMENT BASINS DURING CONSTRUCTION SHALL BE DREDGED AFTER THE SITE HAS BEEN STABILIZED TO RESTORE THE POND TO THE PROPOSED BOTTOM ELEVATION.

12. ALL CONSTRUCTION SHALL CONFORM TO LOCAL AND STATE RULES INCLUDING THE NATIONAL POLLUTANT DISCHARGE ELIMINATION SYSTEM (NPDES) PERMIT REQUIREMENTS.

13. THE SITE MUST BE KEPT IN A WELL-DRAINED CONDITION AT ALL TIMES. THE CONTRACTOR SHALL BE RESPONSIBLE FOR TEMPORARY DITCHES, PIPING OR OTHER MEANS REQUIRED TO INSURE PROPER DRAINAGE DURING CONSTRUCTION. LOW POINTS IN ROADWAYS OR BUILDING PADS MUST BE PROVIDED WITH A POSITIVE OUTFLOW.

14. PUBLIC STREETS USED FOR HAULING SHALL BE KEPT FREE OF SOIL AND DEBRIS. STREET SWEEPING SHALL BE CONCURRENT WITH SITE WORK.

1" = 30'

0' 30' 60' 90'

NOT FOR CONSTRUCTION

DESIGNED: DTB
CHECKED: DTB
DRAWN: TBM
HORIZONTAL SCALE: ###
VERTICAL SCALE: ### or ##

INITIAL ISSUE:	10/16/2020	
REVISIONS:		
1	01/25/2021	US BANK FINAL DEVELOPMENT SUBMITTAL
2		
3		
4		
5		

PREPARED FOR:
ORION/MORTENSON
4530 WEST 77TH STREET SUITE #365
EDINA, MN 55435

I HEREBY CERTIFY THAT THIS PLAN WAS PREPARED BY ME OR UNDER MY DIRECT SUPERVISION AND THAT I AM A DULY LICENSED PROFESSIONAL ENGINEER UNDER THE LAWS OF THE STATE OF MINNESOTA.

DAVID T. BADE
DATE 01/25/2021 LICENSE NO. ____

70TH AND FRANCE REDEVELOPMENT
EDINA, MN

Westwood
Phone (952) 937-5150 12701 Whitewater Drive, Suite #200
Fax (952) 937-5822 Minnetonka, MN 55343
Toll Free (888) 937-5150 westwoodps.com
Westwood Professional Services, Inc.

EROSION CONTROL PLAN

SHEET NUMBER:
C301

DATE: 01/25/2021

PROJECT NUMBER: 0029211.10

70TH AND FRANCE REDEVELOPMENT

N:\0029211.10\DWG\CIVIL\0029211.10EC01.DWG

© 2021 Westwood Professional Services, Inc.

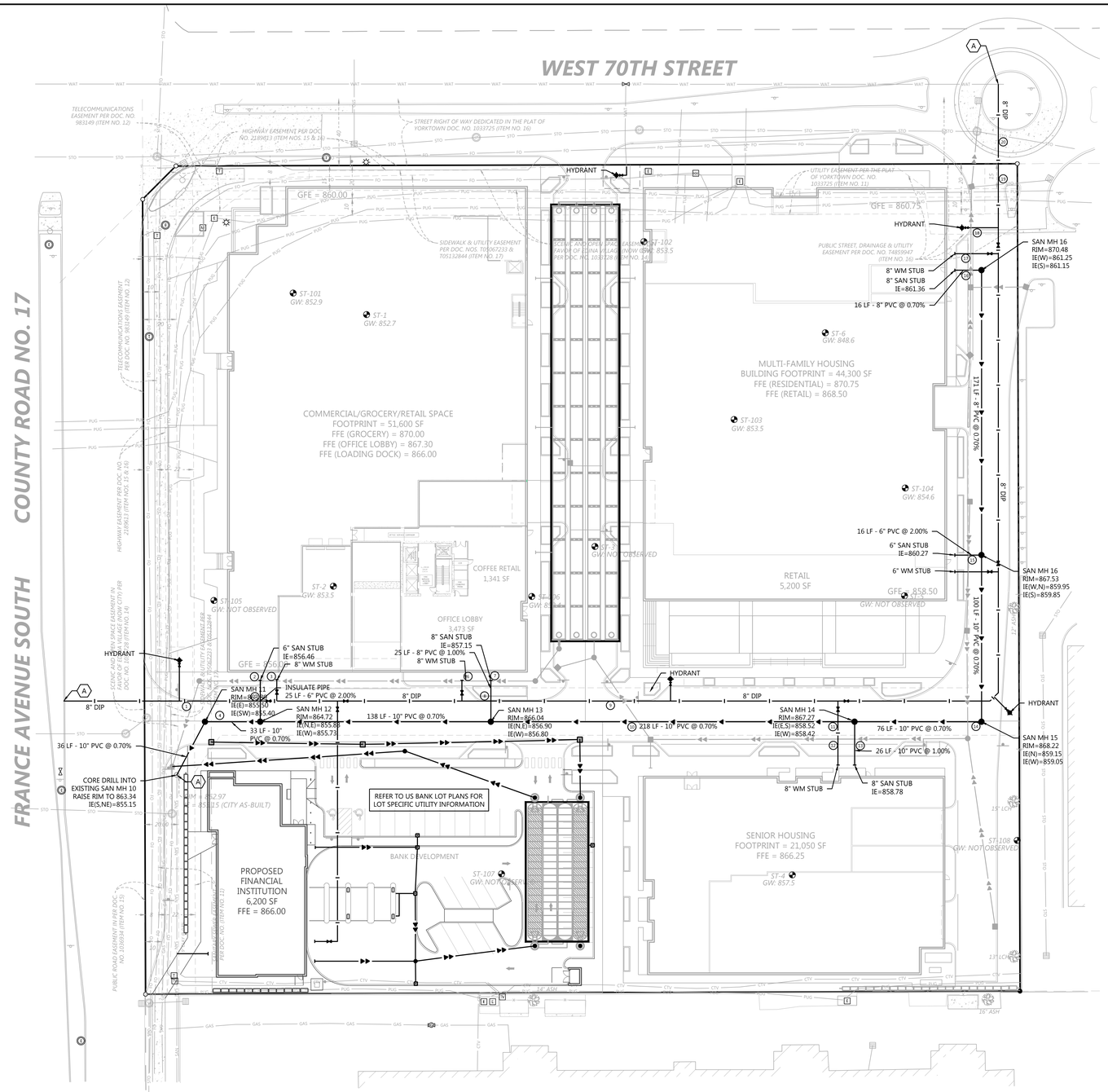

UTILITY LEGEND

EXISTING	PROPOSED	
		PROPERTY LINE
		EASEMENT LINE
		CURB AND GUTTER
SAN	SAN	SANITARY SEWER
FM	FM	SANITARY SEWER FORCE MAIN
STO	STO	STORM SEWER
WAT	WAT	WATER MAIN
WAT	WAT	HYDRANT
GAS	GAS	GAS
PUG	PUG	UNDERGROUND ELECTRIC
POH	POH	OVERHEAD ELECTRIC
TUG	TOH	UNDERGROUND TELEPHONE
TOH	TOH	OVERHEAD TELEPHONE
FO	FO	TELEPHONE FIBER OPTIC
CTV	CTV	CABLE TELEVISION
DT	DT	DRAIN TILE
		GATE VALVE
		FLARED END SECTION (WITH RIPRAP)
		LIGHT POLE

GENERAL UTILITY NOTES

1. THE CONTRACTOR IS SPECIFICALLY CAUTIONED THAT THE LOCATION AND/OR ELEVATION OF EXISTING UTILITIES AS SHOWN ON THESE PLANS ARE BASED ON RECORDS OF THE VARIOUS UTILITY COMPANIES AND LIMITED MEASUREMENTS TAKEN IN THE FIELD. THE INFORMATION SHALL NOT BE RELIED ON AS BEING EXACT OR COMPLETE. THE CONTRACTOR SHALL VERIFY EXISTING CONDITIONS PRIOR TO CONSTRUCTION AND NOTIFY THE OWNER OR ENGINEER OF DISCREPANCIES.
2. ALL SANITARY SEWER, STORM SEWER AND WATER MAIN MATERIAL AND INSTALLATIONS SHALL BE PER CITY REQUIREMENTS, MINNESOTA PLUMBING CODE, AND IN ACCORDANCE WITH THE CURRENT EDITION OF "STANDARD SPECIFICATIONS FOR WATER MAIN AND SERVICE LINE INSTALLATION AND SANITARY SEWER AND STORM SEWER INSTALLATION" AS PREPARED BY THE CITY ENGINEERS ASSOCIATION OF MINNESOTA.
3. PRIOR TO CONSTRUCTION, THE CONTRACTOR SHALL OBTAIN THE NECESSARY FEDERAL, STATE AND LOCAL PERMITS FOR THE PROPOSED WORK OR VERIFY WITH THE OWNER OR ENGINEER THAT PERMITS HAVE BEEN OBTAINED. PERMIT FEES SHALL BE THE RESPONSIBILITY OF THE CONTRACTOR UNLESS OTHERWISE ARRANGED WITH THE OWNER.
4. CONTRACTOR SHALL REFER TO ARCHITECTURAL PLANS FOR EXACT LOCATION AND DIMENSIONS OF DOORWAYS, RAMPS, TRUCK DOCKS, PRECISE BUILDING DIMENSIONS AND EXACT BUILDING UTILITY CONNECTION LOCATIONS.
5. ALL PRIVATE UTILITIES SHALL BE CONSTRUCTED IN ACCORDANCE WITH THE SPECIFICATIONS OF THE APPROPRIATE UTILITY COMPANY. THE CONTRACTOR SHALL COORDINATE THE SERVICE LINE CONSTRUCTION WITH THE UTILITY COMPANIES.
6. CONTRACTOR SHALL OBTAIN ALL NECESSARY CITY PERMITS FOR UTILITY CONNECTIONS, AND UTILITIES SHALL BE INSPECTED AND APPROVED BY THE CITY. THE CITY SHALL BE NOTIFIED 48-HOURS PRIOR TO COMMENCING WITH THE UTILITY CONSTRUCTION OR ANY REQUIRED TESTING. CONTRACTOR SHALL NOT OPERATE, INTERFERE WITH, CONNECT ANY PIPE OR HOSE TO, OR TAP ANY WATER MAIN BELONGING TO THE CITY UNLESS DULY AUTHORIZED TO DO SO BY THE CITY. ANY ADVERSE CONSEQUENCES OF SCHEDULED OR UNSCHEDULED DISRUPTIONS OF SERVICE TO THE PUBLIC ARE TO BE THE RESPONSIBILITY OF THE CONTRACTOR.
7. WATER MAIN LENGTHS AS SHOWN ARE APPROXIMATE HORIZONTAL LENGTHS. ALLOW FOR ADDITIONAL PIPE WHEN INSTALLING ON SLOPES OR WHEN DEFLECTIONS ARE REQUIRED. THE JOINT DEFLECTIONS SHALL NOT EXCEED THE MAXIMUM RECOMMENDED BY THE PIPE MANUFACTURER OR BY LOCAL GOVERNING SPECIFICATIONS. FITTINGS REQUIRED TO CONSTRUCT WATER MAIN SHALL BE INCLUDED IN WATER MAIN CONSTRUCTION.
8. PROVIDE WATER MAIN THRUST RESTRAINTS PER CITY STANDARD REQUIREMENTS.
9. A MINIMUM VERTICAL SEPARATION OF 18 INCHES IS REQUIRED AT ALL WATER LINE CROSSINGS WITH SANITARY SEWER OR STORM SEWER. THE WATER LINE SHALL NOT HAVE JOINTS OR CONNECTION WITHIN 10-FEET OF THE CROSSING. INSULATE CROSSINGS WITH STORM SEWER.
10. UTILITY SERVICES TYPICALLY TERMINATE 5' OUTSIDE BUILDING WALL UNLESS OTHERWISE SHOWN OR NOTED.
11. DUCTILE IRON WATER LINES SHALL BE CLASS 52, PER AWWA C115 OR C151. COPPER WATER LINES SHALL BE TYPE K PER ASTM B88. PVC WATER LINES SHALL BE PER AWWA C900 AND INSTALLED PER AWWA C605 IF ALLOWED BY CITY.
12. ALL WATER LINES SHALL HAVE 7.5' MINIMUM COVER. INSULATE WATER MAIN IF LESS THAN 8' OF COVER. INSULATION SHALL BE DOW STYROFOAM HI BRAND 35 OR EQUIVALENT, WITH 4 INCHES OF THICKNESS.
13. SANITARY SEWER PIPE OUTSIDE THE BUILDING ENVELOPE SHALL BE POLYVINYL CHLORIDE (PVC) SDR 35 OR 26. SDR 26 IS REQUIRED FOR DEPTHS GREATER THAN 15 FEET. SANITARY SEWER PIPE WITHIN 5 FEET OF THE BUILDING AND UNDER FOOTINGS SHALL BE SCHEDULE 40 PER ASTM D2665. ALL PLASTIC SANITARY SEWER SHALL BE INSTALLED PER D2321. SOLVENT WELD JOINTS MUST INCLUDE USE OF A PRIMER WHICH IS OF A CONTRASTING COLOR TO THE PIPE AND CEMENT. ALL SANITARY SEWER SHALL BE TESTED ACCORDING TO MINNESOTA PLUMBING CODE, PART 712.0.
14. STORM SEWER PIPE:
    A. RCP AND HDPE PIPE MAY BE INSTALLED WITH APPROVAL OF LOCAL GOVERNING AGENCY.
    B. REINFORCED CONCRETE PIPE SHALL BE CLASS 5 FOR PIPE DIAMETERS 18" AND SMALLER, CLASS 3 FOR PIPE DIAMETERS 21" AND LARGER UNLESS OTHERWISE NOTED, PER ASTM C76 WITH R-4 GASKETS.
    C. HDPE STORM PIPE 4- TO 10-INCHES IN DIAMETER SHALL MEET REQUIREMENTS OF AASHTO M252. HDPE STORM PIPE 12- TO 60-INCHES IN DIAMETER SHALL MEET REQUIREMENTS OF ASTM F2306. FITTINGS SHALL BE PER ASTM D3212 AND INSTALLED PER ASTM D2321.
    D. PVC STORM SEWER PIPE AND FITTINGS SHALL BE SCHEDULE 40 PIPE PER ASTM D2665 AND INSTALLED PER ASTM D2321.
    E. CORRUGATED METAL PIPE (CMP) FOR SIZES 18- TO 120-INCH AND MUST MEET ASTM A760 OR ASTM A796 AND BE INSTALLED PER ASTM A798. CMP MAY NOT BE INSTALLED WITHIN 10-FEET OF A WATERMAIN, WATER SERVICE, OR A BUILDING.
    F. ALL STORM SEWER JOINTS AND STRUCTURE CONNECTIONS SHALL BE GASTIGHT OR WATERTIGHT AS REQUIRED BY MINNESOTA PLUMBING CODE, PART 707.3. STORM SEWER LOCATED WITHIN 10-FEET OF A BUILDING AND/OR WATER LINE SHALL BE TESTED PER MINNESOTA PLUMBING CODE, PART 712.
15. ALL NONCONDUCTIVE PIPE SHALL BE INSTALLED WITH A LOCATE (TRACER) WIRE PER MINNESOTA RULES, PART 7560.0150.
16. POST INDICATOR VALVES SHALL BE CLOW F-5750 (OR EQUIVALENT) MEETING AWWA STANDARD C509 AND CITY STANDARDS. VALVE TO BE MECHANICAL JOINT RESILIENT WEDGE GATE VALVE. POST TO BE ADJUSTABLE FOR 8 FEET WATER MAIN DEPTH. THE ELECTRICAL ALARM SWITCH SHALL BE PART NO. PCVS2 (OR EQUIVALENT).
17. AFTER CONSTRUCTION IS COMPLETED, THE CONTRACTOR SHALL PROVIDE THE OWNER WITH AN AS-BUILT RECORD OF UTILITY CONSTRUCTION. THE AS-BUILT SHALL INCLUDE LOCATION AND LENGTH DEVIATIONS OR CHANGES TO THE PLAN. CONTRACTOR TO VERIFY WITH OWNER OR ENGINEER WHETHER A PLAN WITH POST-CONSTRUCTION ELEVATIONS IS REQUIRED.
18. ALL MANHOLE CASTINGS IN PAVED AREAS SHALL BE SUMPED 0.05 FEET. RIM ELEVATIONS ON PLAN REFLECT THE SUMPED ELEVATIONS.
19. ALL CATCH BASIN CASTINGS IN CURB SHALL BE SUMPED 0.15 FEET AND MANHOLE CASTINGS IN PAVED AREAS SHALL BE SUMPED 0.05 FEET. RIM ELEVATIONS ON PLAN REFLECT THE SUMPED ELEVATIONS.

(A) UTILITY KEYNOTE

A. CONNECT TO EXISTING. COORDINATE CONNECTION WITH THE CITY.

Call 48 Hours before digging:
811 or call811.com
Common Ground Alliance

DESIGNED:
CHECKED:
DRAWN:
HORIZONTAL SCALE: ###
VERTICAL SCALE: ### or ##

INITIAL ISSUE: 10/16/2020
REVISIONS:
01/25/2021 US BANK FINAL DEVELOPMENT SUBMITTAL

PREPARED FOR:
ORION/MORTENSON
4530 WEST 77TH STREET SUITE #365
EDINA, MN 55435

I HEREBY CERTIFY THAT THIS PLAN WAS PREPARED BY ME OR UNDER MY DIRECT SUPERVISION AND THAT I AM A DULY LICENSED PROFESSIONAL ENGINEER UNDER THE LAWS OF THE STATE OF MINNESOTA.
DAVID T. BADE
DATE 01/25/2021 LICENSE NO. ____

70TH AND FRANCE REDEVELOPMENT
EDINA, MN

Westwood
Phone (952) 937-5150 12701 Whitewater Drive, Suite #200
Fax (952) 937-5822 Minnetonka, MN 55343
Toll Free (888) 937-5150 www.westwoodps.com
Westwood Professional Services, Inc.

SANITARY AND WATERMAIN PLAN

SHEET NUMBER:
C400

DATE: 01/25/2021

70TH AND FRANCE REDEVELOPMENT

PROJECT NUMBER: 0029211.10

N:\0029211.10\DWG\CIVIL\0029211.10UT01.DWG

1" = 30'
0' 30' 60' 90'

NOT FOR CONSTRUCTION

© 2021 Westwood Professional Services, Inc.

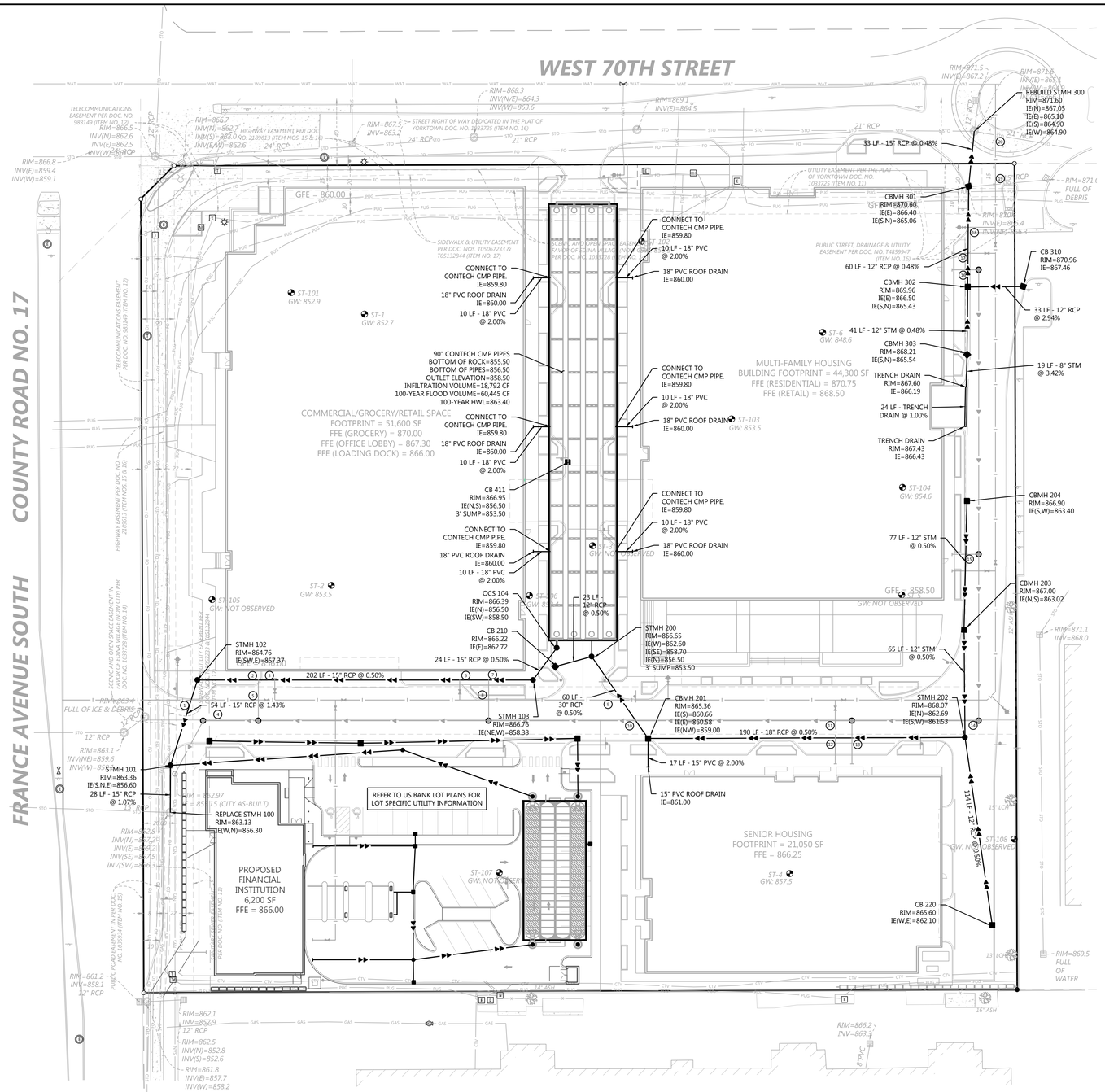

UTILITY LEGEND

EXISTING	PROPOSED	
		PROPERTY LINE
		EASEMENT LINE
		CURB AND GUTTER
SAN		SANITARY SEWER
FM	FM	SANITARY SEWER FORCE MAIN
STO		STORM SEWER
WAT		WATER MAIN
WAT		HYDRANT
GAS	GAS	GAS
PUG	PUG	UNDERGROUND ELECTRIC
POH	POH	OVERHEAD ELECTRIC
TUG	TOH	UNDERGROUND TELEPHONE
TOH	TOH	OVERHEAD TELEPHONE
FO	FO	TELEPHONE FIBER OPTIC
CTV	CTV	CABLE TELEVISION
DT		DRAIN TILE
		GATE VALVE
		FLARED END SECTION (WITH RIPRAP)
		LIGHT POLE

Call 48 Hours before digging:
811 or call811.com
Common Ground Alliance

GENERAL UTILITY NOTES

1. THE CONTRACTOR IS SPECIFICALLY CAUTIONED THAT THE LOCATION AND/OR ELEVATION OF EXISTING UTILITIES AS SHOWN ON THESE PLANS ARE BASED ON RECORDS OF THE VARIOUS UTILITY COMPANIES AND LIMITED MEASUREMENTS TAKEN IN THE FIELD. THE INFORMATION SHALL NOT BE RELIED ON AS BEING EXACT OR COMPLETE. THE CONTRACTOR SHALL VERIFY EXISTING CONDITIONS PRIOR TO CONSTRUCTION AND NOTIFY THE OWNER OR ENGINEER OF DISCREPANCIES.

2. ALL SANITARY SEWER, STORM SEWER AND WATER MAIN MATERIAL AND INSTALLATIONS SHALL BE PER CITY REQUIREMENTS, MINNESOTA PLUMBING CODE, AND IN ACCORDANCE WITH THE CURRENT EDITION OF "STANDARD SPECIFICATIONS FOR WATER MAIN AND SERVICE LINE INSTALLATION AND SANITARY SEWER AND STORM SEWER INSTALLATION" AS PREPARED BY THE CITY ENGINEERS ASSOCIATION OF MINNESOTA.

3. PRIOR TO CONSTRUCTION, THE CONTRACTOR SHALL OBTAIN THE NECESSARY FEDERAL, STATE AND LOCAL PERMITS FOR THE PROPOSED WORK OR VERIFY WITH THE OWNER OR ENGINEER THAT PERMITS HAVE BEEN OBTAINED. PERMIT FEES SHALL BE THE RESPONSIBILITY OF THE CONTRACTOR UNLESS OTHERWISE ARRANGED WITH THE OWNER.

4. CONTRACTOR SHALL REFER TO ARCHITECTURAL PLANS FOR EXACT LOCATION AND DIMENSIONS OF DOORWAYS, RAMPS, TRUCK DOCKS, PRECISE BUILDING DIMENSIONS AND EXACT BUILDING UTILITY CONNECTION LOCATIONS.

5. ALL PRIVATE UTILITIES SHALL BE CONSTRUCTED IN ACCORDANCE WITH THE SPECIFICATIONS OF THE APPROPRIATE UTILITY COMPANY. THE CONTRACTOR SHALL COORDINATE THE SERVICE LINE CONSTRUCTION WITH THE UTILITY COMPANIES.

6. CONTRACTOR SHALL OBTAIN ALL NECESSARY CITY PERMITS FOR UTILITY CONNECTIONS, AND UTILITIES SHALL BE INSPECTED AND APPROVED BY THE CITY. THE CITY SHALL BE NOTIFIED 48-HOURS PRIOR TO COMMENCING WITH THE UTILITY CONSTRUCTION OR ANY REQUIRED TESTING. CONTRACTOR SHALL NOT OPERATE, INTERFERE WITH, CONNECT ANY PIPE OR HOSE TO, OR TAP ANY WATER MAIN BELONGING TO THE CITY UNLESS DULY AUTHORIZED TO DO SO BY THE CITY. ANY ADVERSE CONSEQUENCES OF SCHEDULED OR UNSCHEDULED DISRUPTIONS OF SERVICE TO THE PUBLIC ARE TO BE THE RESPONSIBILITY OF THE CONTRACTOR.

7. WATER MAIN LENGTHS AS SHOWN ARE APPROXIMATE HORIZONTAL LENGTHS. ALLOW FOR ADDITIONAL PIPE WHEN INSTALLING ON SLOPES OR WHEN DEFLECTIONS ARE REQUIRED. THE JOINT DEFLECTIONS SHALL NOT EXCEED THE MAXIMUM RECOMMENDED BY THE PIPE MANUFACTURER OR BY LOCAL GOVERNING SPECIFICATIONS. FITTINGS REQUIRED TO CONSTRUCT WATER MAIN SHALL BE INCLUDED IN WATER MAIN CONSTRUCTION.

8. PROVIDE WATER MAIN THRUST RESTRAINTS PER CITY STANDARD REQUIREMENTS.

9. A MINIMUM VERTICAL SEPARATION OF 18 INCHES IS REQUIRED AT ALL WATER LINE CROSSINGS WITH SANITARY SEWER OR STORM SEWER. THE WATER LINE SHALL NOT HAVE JOINTS OR CONNECTION WITHIN 10-FEET OF THE CROSSING. INSULATE CROSSINGS WITH STORM SEWER.

10. UTILITY SERVICES TYPICALLY TERMINATE 5' OUTSIDE BUILDING WALL UNLESS OTHERWISE SHOWN OR NOTED.

11. DUCTILE IRON WATER LINES SHALL BE CLASS 52, PER AWWA C115 OR C151. COPPER WATER LINES SHALL BE TYPE K PER ASTM B88. PVC WATER LINES SHALL BE PER AWWA C900 AND INSTALLED PER AWWA C605 IF ALLOWED BY CITY.

12. ALL WATER LINES SHALL HAVE 8' MINIMUM COVER. INSULATE WATER MAIN IF LESS THAN 8' OF COVER. INSULATION SHALL BE DOW STYROFOAM HI BRAND 35 OR EQUIVALENT, WITH 4 INCHES OF THICKNESS.

13. SANITARY SEWER PIPE OUTSIDE THE BUILDING ENVELOPE SHALL BE POLYVINYL CHLORIDE (PVC) SDR 35 OR 26. SDR 26 IS REQUIRED FOR DEPTHS GREATER THAN 15 FEET. SANITARY SEWER PIPE WITHIN 5 FEET OF THE BUILDING AND UNDER FOOTINGS SHALL BE SCHEDULE 40 PER ASTM D2665. ALL PLASTIC SANITARY SEWER SHALL BE INSTALLED PER D2321. SOLVENT WELD JOINTS MUST INCLUDE USE OF A PRIMER WHICH IS OF A CONTRASTING COLOR TO THE PIPE AND CEMENT. ALL SANITARY SEWER SHALL BE TESTED ACCORDING TO MINNESOTA PLUMBING CODE, PART 712.0.

14. STORM SEWER PIPE:

    A. RCP AND HDPE PIPE MAY BE INSTALLED WITH APPROVAL OF LOCAL GOVERNING AGENCY.

    B. REINFORCED CONCRETE PIPE SHALL BE CLASS 5 FOR PIPE DIAMETERS 18" AND SMALLER, CLASS 3 FOR PIPE DIAMETERS 21" AND LARGER UNLESS OTHERWISE NOTED, PER ASTM C76 WITH R-4 GASKETS.

    C. HDPE STORM PIPE 4- TO 10-INCHES IN DIAMETER SHALL MEET REQUIREMENTS OF AASHTO M252. HDPE STORM PIPE 12- TO 60-INCHES IN DIAMETER SHALL MEET REQUIREMENTS OF ASTM F2306. FITTINGS SHALL BE PER ASTM D3212 AND INSTALLED PER ASTM D2321.

    D. PVC STORM SEWER PIPE AND FITTINGS SHALL BE SCHEDULE 40 PIPE PER ASTM D2665 AND INSTALLED PER ASTM D2321.

    E. CORRUGATED METAL PIPE (CMP) FOR SIZES 18- TO 120-INCH AND MUST MEET ASTM A760 OR ASTM A796 AND BE INSTALLED PER ASTM A798. CMP MAY NOT BE INSTALLED WITHIN 10-FEET OF A WATERMAIN, WATER SERVICE, OR A BUILDING.

    F. ALL STORM SEWER JOINTS AND STRUCTURE CONNECTIONS SHALL BE GASTIGHT OR WATERTIGHT AS REQUIRED BY MINNESOTA PLUMBING CODE, PART 707.3. STORM SEWER LOCATED WITHIN 10-FEET OF A BUILDING AND/OR WATER LINE SHALL BE TESTED PER MINNESOTA PLUMBING CODE, PART 712.

15. ALL NONCONDUCTIVE PIPE SHALL BE INSTALLED WITH A LOCATE (TRACER) WIRE PER MINNESOTA RULES, PART 7560.0150.

16. POST INDICATOR VALVES SHALL BE CLOW F-5750 (OR EQUIVALENT) MEETING AWWA STANDARD C509 AND CITY STANDARDS. VALVE TO BE MECHANICAL JOINT RESILIENT WEDGE GATE VALVE. POST TO BE ADJUSTABLE FOR 8 FEET WATER MAIN DEPTH. THE ELECTRICAL ALARM SWITCH SHALL BE PART NO. PCVS2 (OR EQUIVALENT).

17. AFTER CONSTRUCTION IS COMPLETED, THE CONTRACTOR SHALL PROVIDE THE OWNER WITH AN AS-BUILT RECORD OF UTILITY CONSTRUCTION. THE AS-BUILT SHALL INCLUDE LOCATION AND LENGTH DEVIATIONS OR CHANGES TO THE PLAN. CONTRACTOR TO VERIFY WITH OWNER OR ENGINEER WHETHER A PLAN WITH POST-CONSTRUCTION ELEVATIONS IS REQUIRED.

18. ALL MANHOLE CASTINGS IN PAVED AREAS SHALL BE SUMPED 0.05 FEET. RIM ELEVATIONS ON PLAN REFLECT THE SUMPED ELEVATIONS.

19. ALL CATCH BASIN CASTINGS IN CURB SHALL BE SUMPED 0.15 FEET AND MANHOLE CASTINGS IN PAVED AREAS SHALL BE SUMPED 0.05 FEET. RIM ELEVATIONS ON PLAN REFLECT THE SUMPED ELEVATIONS.

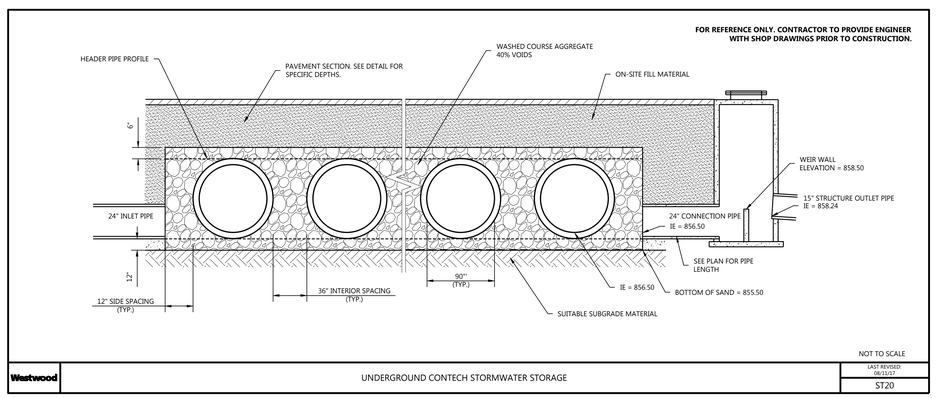

DESIGNED:
CHECKED:
DRAWN:
HORIZONTAL SCALE: ###
VERTICAL SCALE: ### or ##

INITIAL ISSUE: 10/16/2020
REVISIONS:
1 01/25/2021 US BANK FINAL DEVELOPMENT SUBMITTAL
2
3
4
5

PREPARED FOR:
ORION/MORTENSON
4530 WEST 77TH STREET SUITE #365
EDINA, MN 55435

I HEREBY CERTIFY THAT THIS PLAN WAS PREPARED BY ME OR UNDER MY DIRECT SUPERVISION AND THAT I AM A DULY LICENSED PROFESSIONAL ENGINEER UNDER THE LAWS OF THE STATE OF MINNESOTA.

DAVID T. BADE
DATE 01/25/2021 LICENSE NO. ____

70TH AND FRANCE REDEVELOPMENT
EDINA, MN

Westwood
Phone (952) 937-5150
Fax (952) 937-5822
Toll Free (800) 505-5150
12701 Whitewater Drive, Suite #200
Minnetonka, MN 55343
www.westwoodps.com
Westwood Professional Services, Inc.

STORM SEWER PLAN

1" = 30'
0' 30' 60' 90'

NOT FOR CONSTRUCTION

SHEET NUMBER:
C401

DATE: 01/25/2021

PROJECT NUMBER: 0029211.10

70TH AND FRANCE REDEVELOPMENT

N:\0029211.10\DWG\CIVIL\0029211.10UT01.DWG

© 2021 Westwood Professional Services, Inc.

Call 48 Hours before digging:
811 or call811.com
Common Ground Alliance

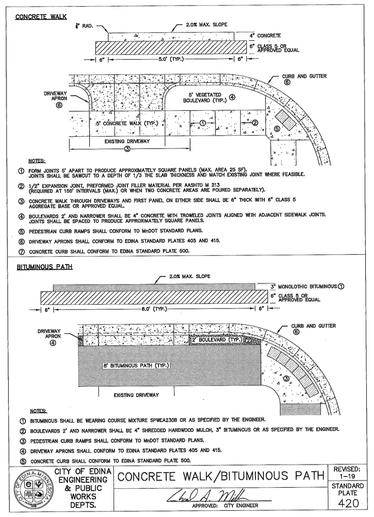

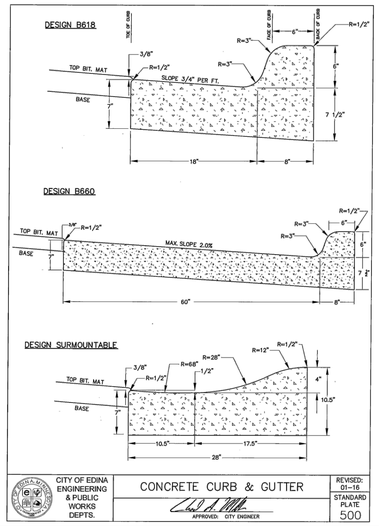

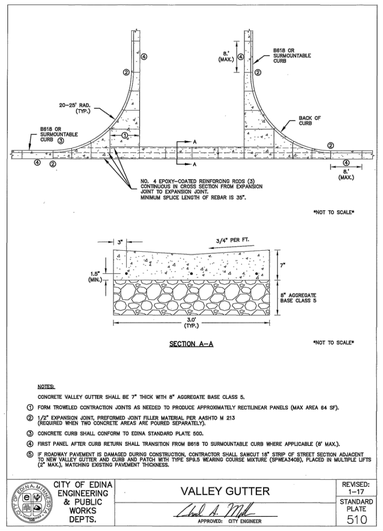

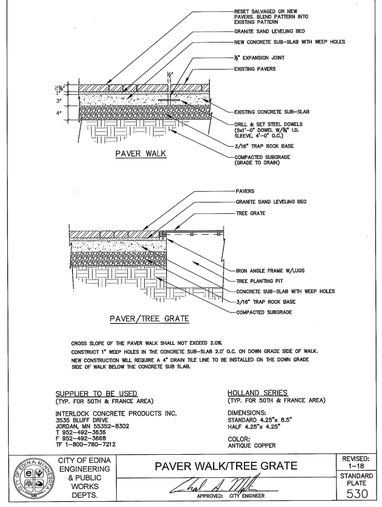

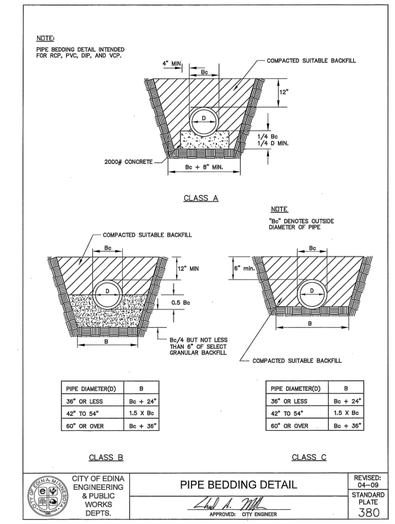

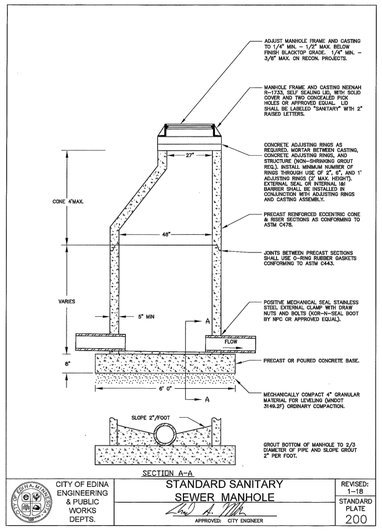

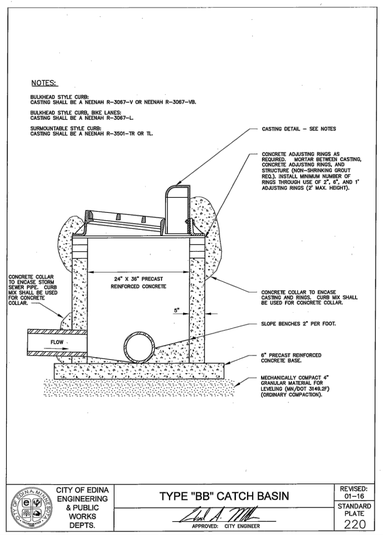

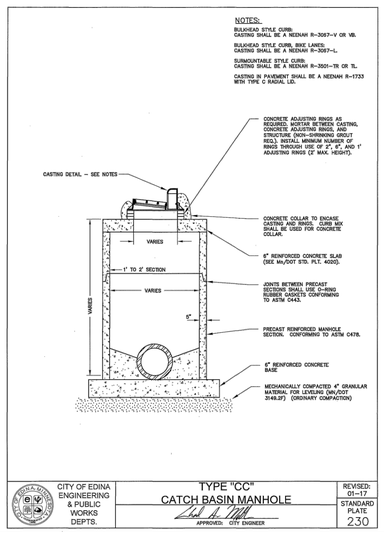

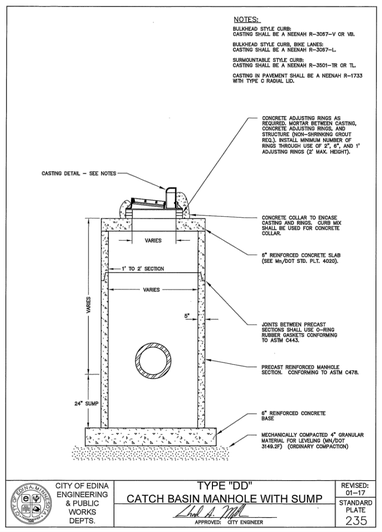

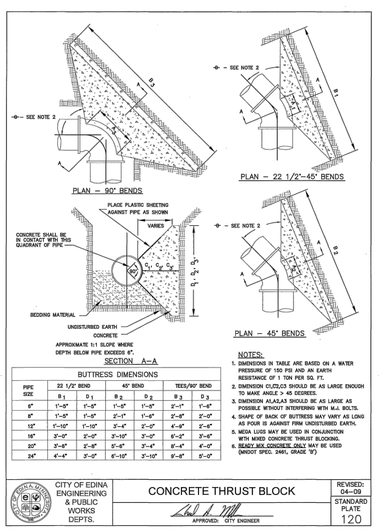

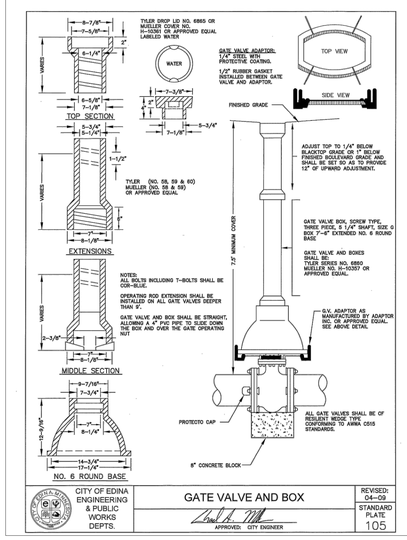

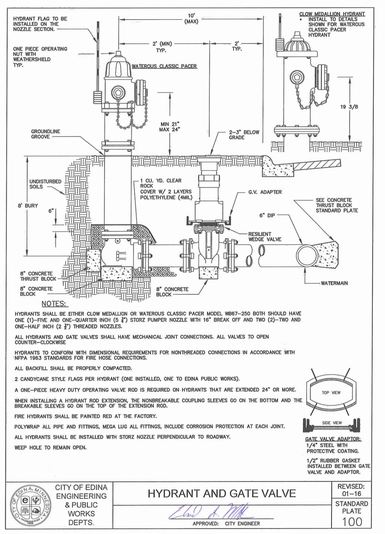

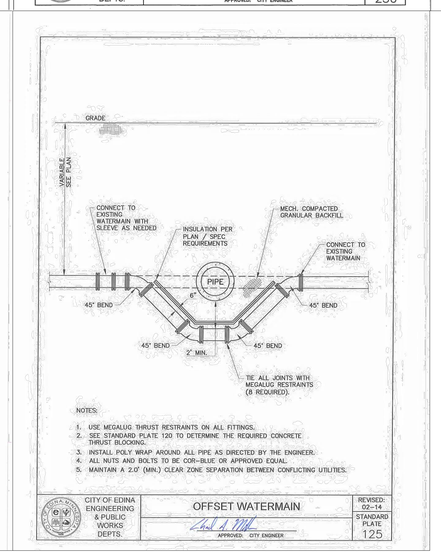

1" = ###

0' ### ### ###

NOT FOR CONSTRUCTION

DESIGNED:
CHECKED:
DRAWN:
HORIZONTAL SCALE: ###
VERTICAL SCALE: ###' or ##'

INITIAL ISSUE: 10/16/2020
REVISIONS:
1 01/25/2021 US BANK FINAL DEVELOPMENT SUBMITTAL

I HEREBY CERTIFY THAT THIS PLAN WAS PREPARED BY ME OR UNDER MY DIRECT SUPERVISION AND THAT I AM A DULY LICENSED PROFESSIONAL ENGINEER UNDER THE LAWS OF THE STATE OF MINNESOTA.

DAVID T. BADE
DATE 01/25/2021 LICENSE NO. ———

PREPARED FOR:
ORION/MORTENSON
4530 WEST 77TH STREET SUITE #365
EDINA, MN 55435

70TH AND FRANCE REDEVELOPMENT
EDINA, MN

Westwood
Phone (952) 937-5150
Fax (952) 937-5822
7500 Flying Cloud Drive, Suite 800
Eden Prairie, Minnesota 55344
Westwood Professional Services, Inc.
12701 Whitewater Drive, Suite #200
Minnetonka, MN 55343
www.westwoodps.com

CITY DETAILS

SHEET NUMBER:
C500

DATE: 01/25/2021

70TH AND FRANCE REDEVELOPMENT

PROJECT NUMBER: 0029211.10

N:\0029211.10\DWGs\CVR\\0029211.10DT01.DWG

© 2021 Westwood Professional Services, Inc.

Call 48 Hours before digging:
811 or call811.com
Common Ground Alliance

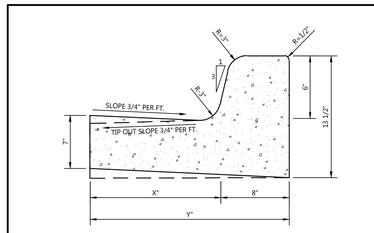

Curb Type	X	Y
B612	12"	20"
B618	18"	26"
B624	24"	32"

NOTES:
1. EXPANSION JOINT SPACING IS 100'
2. MIN. 3" CL. 5 UNDER C.&G.
3. CURB SHALL BE PER MnDOT SPEC 2531

Westwood | B6 STYLE CURB AND GUTTER | LAST REVISED: 01/09/20 | SI01

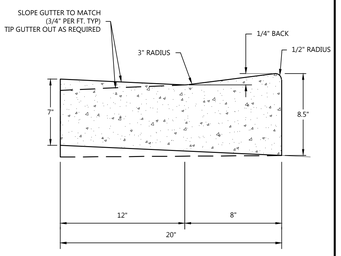

Westwood | FLUSH CURB AND GUTTER | LAST REVISED: 11/29/18 | SI02-D

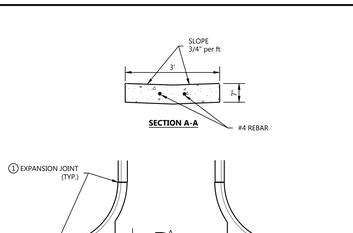

NOTES:
1. 1/2" PREFORMED JOINT FILLER MATERIAL- AASHTO M213
2. CONCRETE GUTTER SHALL BE PER MnDOT SPEC 2531

Westwood | CONCRETE CROSS GUTTER | LAST REVISED: 08/15/17 | SI06

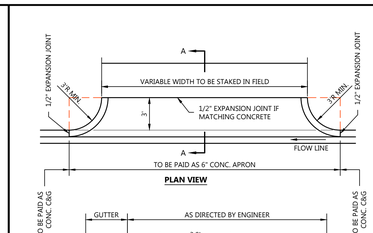

NOTES:
1. 1/2" PREFORMED JOINT FILLER MATERIAL- AASHTO M213
2. CONCRETE GUTTER SHALL BE PER MnDOT SPEC 2531

Westwood | ENTRANCE THRU CURB AND GUTTER | LAST REVISED: 08/15/17 | SI07

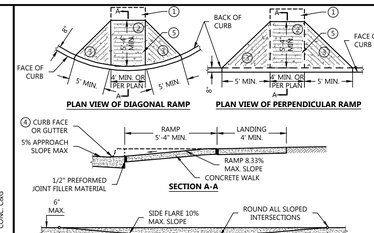

NOTES:
1. PROVIDE A RELATIVELY FLAT MINIMUM 4'x4' LANDING BEHIND THE PEDESTRIAN RAMP, 2% MAXIMUM CROSS SLOPE BOTH DIRECTIONS.
2. CURB RAMP AREA TO BE CONCRETE AND MEET LATEST ADA REQUIREMENTS. RAMP CROSS SLOPE 2% MAXIMUM. BACK-TO-BACK PEDESTRIAN RAMPS SHALL HAVE MINIMUM 48" LANDING BETWEEN, OR PROVIDE AT-GRADE CROSSING.
3. SIDE FLARES TO BE CONCRETE AND IMPLEMENTED WHERE ADJACENT TO PAVED AREAS. FLARED SLOPE TO BE 10% MAXIMUM. EXISTING CURB RAMP ALTERATIONS, WITH NO LANDING, SHALL BE 8.33% MAXIMUM. PROVIDE 10% MAXIMUM SLOPE, UNLESS NOTED OTHERWISE.
4. ANY VERTICAL LIP THAT OCCURS AT THE FLOW LINE MAY NOT BE GREATER THAN 1/4 INCH.
5. ADA REQUIRED DETECTABLE WARNING SURFACE(TRUNCATED DOMES) SHALL BE 2' MIN. IN DIRECTION OF LANDING AT CURB AND SHALL EXTEND THE FULL WIDTH OF THE LANDING. AREA SHALL BE CONTRASTING COLOR TO THE ADJACENT WALKING SURFACE WITH A PREFABRICATED CAST IRON TRUNCATED DOME INSERT MEETING THE ADA DOME SIZE AND SPACING REQUIREMENTS.

Westwood | PRIVATE PEDESTRIAN CURB RAMP | LAST REVISED: 08/15/17 | SI09

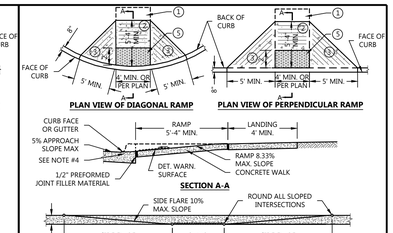

NOTES:
1. PROVIDE A RELATIVELY FLAT MINIMUM 4'x4' LANDING BEHIND THE PEDESTRIAN RAMP, 2% MAXIMUM CROSS SLOPE BOTH DIRECTIONS.
2. CURB RAMP AREA TO BE CONCRETE AND MEET LATEST ADA REQUIREMENTS. RAMP CROSS SLOPE 2% MAXIMUM. BACK-TO-BACK PEDESTRIAN RAMPS SHALL HAVE MINIMUM 48" LANDING BETWEEN, OR PROVIDE AT-GRADE CROSSING.
3. SIDE FLARES TO BE CONCRETE AND IMPLEMENTED WHERE ADJACENT TO PAVED AREAS. FLARED SLOPE TO BE 10% MAXIMUM. EXISTING CURB RAMP ALTERATIONS, WITH NO LANDING, SHALL BE 8.33% MAXIMUM. PROVIDE 10% MAXIMUM SLOPE, UNLESS NOTED OTHERWISE.
4. ANY VERTICAL LIP THAT OCCURS AT THE FLOW LINE MAY NOT BE GREATER THAN 1/4 INCH.
5. ADA REQUIRED DETECTABLE WARNING SURFACE(TRUNCATED DOMES) SHALL BE 2' MIN. IN DIRECTION OF LANDING AT CURB AND SHALL EXTEND THE FULL WIDTH OF THE LANDING. AREA SHALL BE CONTRASTING COLOR TO THE ADJACENT WALKING SURFACE WITH A PREFABRICATED CAST IRON TRUNCATED DOME INSERT MEETING THE ADA DOME SIZE AND SPACING REQUIREMENTS.

Westwood | PUBLIC PEDESTRIAN CURB RAMP | LAST REVISED: 08/15/17 | SI09A

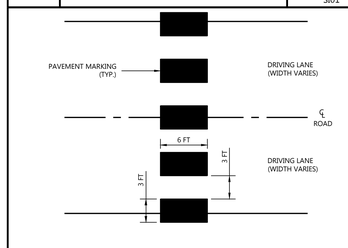

NOTES:
1. TAPED AREAS TO BE CENTERED AND ALIGNED ON CENTER LINE AND LANE LINES. MAKE ADJUSTMENTS IN CENTER MEDIAN AREA.
2. ZEBRA CROSSWALKS SHALL BE WHITE POLYMER-PREFORMED TAPE OR AN ACCEPTABLE EQUIVALENT APPROVED BY THE ENGINEER.
3. A MINIMUM OF 1.5 FT. CLEAR DISTANCE MUST BE LEFT ADJACENT TO CURB. IF LAST STRIPED AREA FALLS INTO THIS DISTANCE, IT MUST BE OMITTED.
4. REMOVE ALL CONFLICTING PAVEMENT MARKINGS AS DIRECTED BY THE ENGINEER.
5. AT SKEWED CROSSWALKS, THE TAPED AREAS ARE TO REMAIN PARALLEL TO THE LANE LINES.
6. WHERE PAVEMENT MARKINGS CAN NOT BE INLAYED INTO THE HOT MAT, PAVEMENT SHALL BE GROOVED FOR THE INSTALLATION OF THE POLYMER-PREFORMED MARKINGS. SEE Mn/DOT STANDARD SPECIFICATION 2564.

Westwood | CROSS WALK STRIPING | LAST REVISED: 08/15/17 | SI11

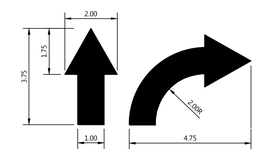

NOTE:
1. ALL TRAFFIC FLOW ARROWS TO BE SOLID WHITE REFLECTIVE TRAFFIC PAINT AS PER DIMENSIONS ABOVE

Westwood | TRAFFIC ARROW | LAST REVISED: 08/15/17 | SI13

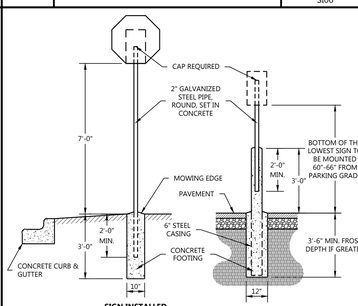

NOTE:
1. SIGN TO BE 2-SIDED WHERE HANDICAP PARKING STALLS FACE ONE ANOTHER.
2. PARKING GRADE IS DEFINED AS EITHER FLOW LINE OF CURB OR PAVEMENT SURFACE AT THE HEAD OF THE STALL.

Westwood | SIGN POST INSTALLATION | LAST REVISED: 06/15/19 | SI14

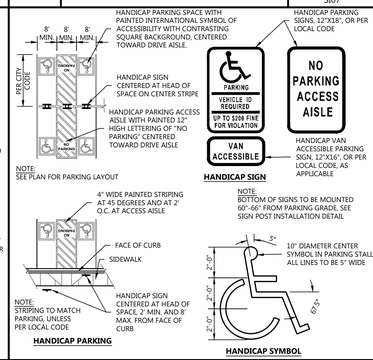

Westwood | HANDICAP ACCESSIBLE SIGNAGE AND STRIPING | LAST REVISED: 08/15/17 | SI15

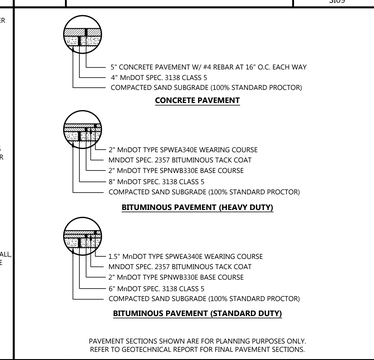

PAVEMENT SECTIONS SHOWN ARE FOR PLANNING PURPOSES ONLY. REFER TO GEOTECHNICAL REPORT FOR FINAL PAVEMENT SECTIONS.

Westwood | PAVEMENT SECTIONS | LAST REVISED: 08/15/17 | SI19

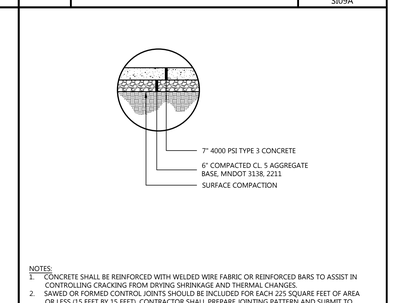

NOTES:
1. CONCRETE SHALL BE REINFORCED WITH WELDED WIRE FABRIC OR REINFORCED BARS TO ASSIST IN CONTROLLING CRACKING FROM DRYING SHRINKAGE AND THERMAL CHANGES.
2. SAWED OR FORMED CONTROL JOINTS SHOULD BE INCLUDED FOR EACH 225 SQUARE FEET OF AREA OR LESS (15 FEET BY 15 FEET). CONTRACTOR SHALL PREPARE JOINTING PATTERN AND SUBMIT TO ENGINEER PRIOR TO CONSTRUCTION.
3. SAW CUTS SHOULD NOT CUT THROUGH THE WELDED WIRE FABRIC OR REINFORCING STEEL AND DOWELS SHOULD BE UTILIZED AT FORMED AND/OR COLD JOINTS.
4. DOWELS SHALL BE UTILIZED AT FORMED AND/OR COLD JOINTS. DOWELS SHALL BE 30" LONG 1/2" DIAMETER SMOOTH AND GREASED TIE BARS AT 30" SPACING, MINIMUM 18" FROM PAVEMENT EDGE.

Westwood | HEAVY DUTY CONCRETE SECTION LOADING DOCK | LAST REVISED: 08/15/17 | SI21

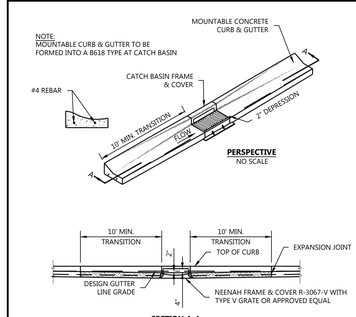

Westwood | MOUNTABLE CURB & GUTTER CONSTRUCTION AT CATCH BASIN | LAST REVISED: 08/15/17 | SI28

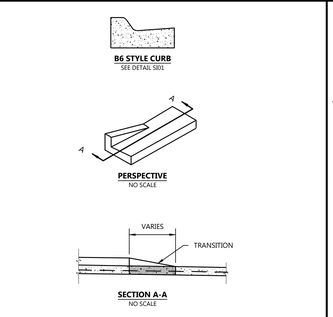

Westwood | TRANSITION CURB | LAST REVISED: 08/15/17 | SI31

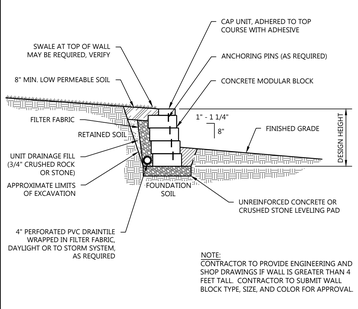

Westwood | MODULAR BLOCK RETAINING WALL | LAST REVISED: 08/15/17 | SI40

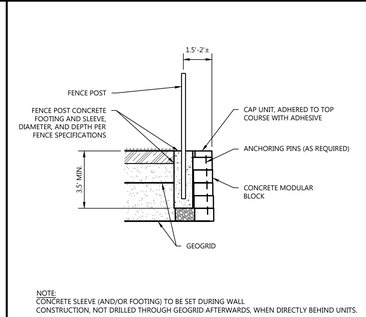

Westwood | FENCE AT MODULAR BLOCK WALL | LAST REVISED: 08/15/17 | SI41

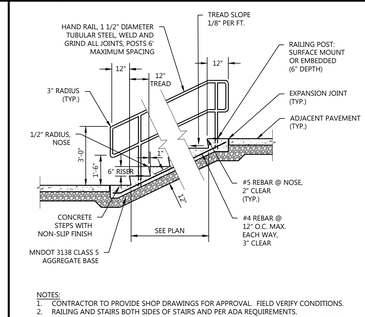

Westwood | CONCRETE STAIR AND RAILING | LAST REVISED: 08/15/17 | SI48

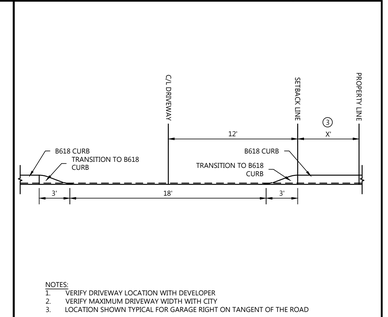

Westwood | TYPICAL CURB CUT SECTION AT DRIVEWAYS | LAST REVISED: 08/15/17 | SI50

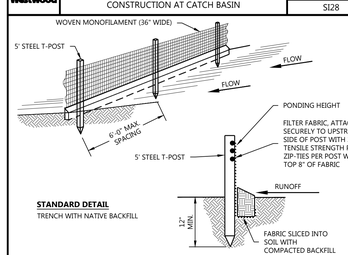

Westwood | MACHINE SLICED SILT FENCE (HEAVY DUTY) | LAST REVISED: 08/15/17 | GD03

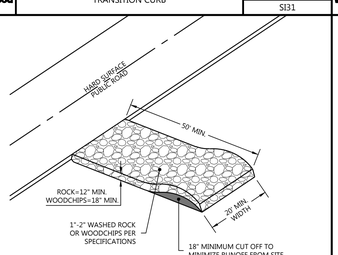

Westwood | CONSTRUCTION ENTRANCE | LAST REVISED: 08/15/17 | GD05

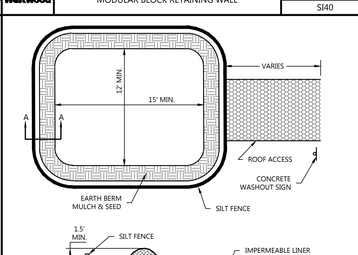

Westwood | CONCRETE WASHOUT AREA | LAST REVISED: 08/15/17 | GD08

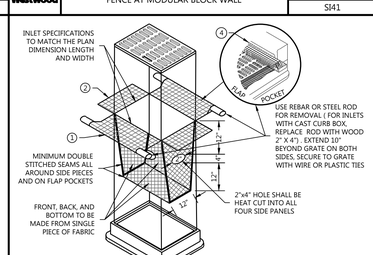

Westwood | STORM DRAIN FILTER BAG INSERT | LAST REVISED: 08/15/17 | GD10

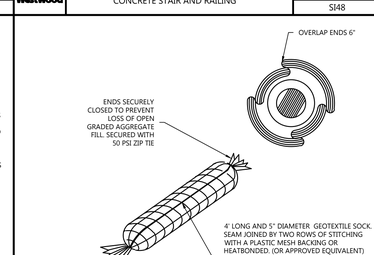

Westwood | INLET PROTECTION WITH ROCK LOG | LAST REVISED: 08/15/17 | GD11

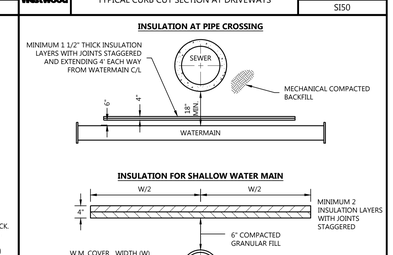

Westwood | WATERMAIN INSULATION | LAST REVISED: 04/08/17 | WM06

N:\0029211.10\DWG\CIVIL\0029211.10DT01.DWG

DESIGNED:
CHECKED:
DRAWN:
HORIZONTAL SCALE: ###
VERTICAL SCALE: ### or ##

INITIAL ISSUE:	10/16/2020
REVISIONS:	
1	01/25/2021 US BANK FINAL DEVELOPMENT SUBMITTAL
2	
3	
4	
5	

PREPARED FOR:
ORION/MORTENSON
4530 WEST 77TH STREET SUITE #365
EDINA, MN 55435

I HEREBY CERTIFY THAT THIS PLAN WAS PREPARED BY ME OR UNDER MY DIRECT SUPERVISION AND THAT I AM A DULY LICENSED PROFESSIONAL ENGINEER UNDER THE LAWS OF THE STATE OF MINNESOTA.
DAVID T. BADE
DATE 01/25/2021 LICENSE NO. ____

70TH AND FRANCE REDEVELOPMENT
EDINA, MN

Westwood
Phone (952) 937-5150 12701 Whitewater Drive, Suite #200
Fax (952) 937-5822 Minnetonka, MN 55343
Toll Free (800) 505-8381 www.westwoodps.com
Westwood Professional Services, Inc.

DETAILS

SHEET NUMBER:
C501
DATE: 01/25/2021

70TH AND FRANCE REDEVELOPMENT

PROJECT NUMBER: 0029211.10